excavator mounted vibrator

EMV 300

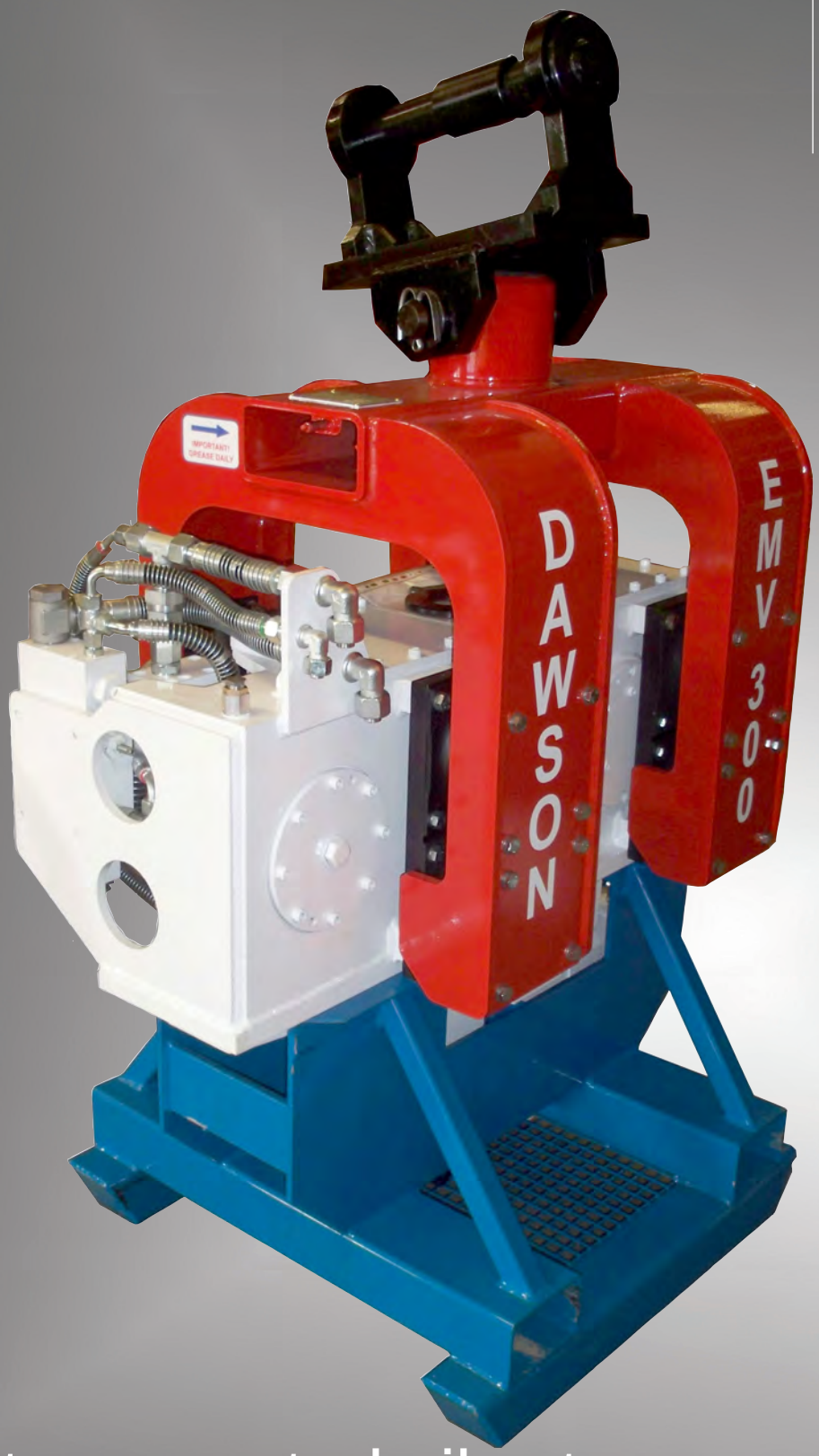

excavator mounted vibrator

owners manual
operators instructions
spare parts list
safety precautions
maintenance

EMV300 ver. 2017-01

DAWSON CONSTRUCTION PLANT LTD.
CHESNEY WOLD,
BLEAK HALL
MILTON KEYNES
MK6 1NE, ENGLAND
TEL: +44 (0) 1908 240300
FAX: +44 (0) 1908 240222
EMAIL: JON@DCPUK.COM

dcp
DAWSON
CONSTRUCTION PLANT LTD
www.dcpuk.com

preface

This manual is used to familiarise you with safety, assembly, operation, adjustment, troubleshooting, and maintenance. Read and follow the recommendations in this manual to ensure safe and efficient operation. Keep this manual with the attachment at all times for future reference.

We want you to be completely satisfied with your new product, feel free to contact your local authorized service dealer for help with service, replacement parts, or any other information you may require. If you need assistance in locating a dealer, visit our web site at www.dcpuk.com or call customer service at +44 (0) 1908 240300.

Whenever you contact your authorised service dealer, always have the model number and serial number of your product available. These numbers will help provide exact information about your specific product. You will find the model and serial numbers on an ID plate located on the product.

The descriptions and specifications in this manual are subject to change without notice. Dawson reserves the right to improve products. Some product improvements may have taken place after this manual was printed.

table of contents

Preface / Table of Contents	3
EU Declaration of Conformity Example	5
Basic Technical Specifications	6
Basic Safety Points	7-8
SAFETY FIRST - Quick Reference Guide	9-10
How does the EMV work?	11-12
Mounting Instructions	13-14
Operating Instructions	15-17
Operating Instructions - Driving Piles (Quick Reference Illustrations)	18-19
Operating Instructions - Extracting Piles (Quick Reference Illustrations)	20-21
Recommended Excavator Positions (Quick Reference Illustrations)	22
Maintenance	23-26
Troubleshooting	27-30
EMV300 hose kit	31-32
Parts lists for the EMV300 - Assembly Drawing	33
Appendix A- Auxiliary equipment (The EMV inspection procedure is also included with this document.)	-

Certificate

Declaration of Conformity

We declare that the machinery/equipment detailed below is in compliance with the applicable regulations and harmonised standards as listed. This declaration ceases to be valid if alterations are made the machinery/equipment without agreement with Dawson Construction Plant Ltd.

Category	Piling Equipment
Type	EMV
Serial Number	45-
Year of Manufacture	2017
Power kW	60
Suitable Excavator Range	12-35 tonnes

Relevant Regulations:

2006/42/EC	Machinery Directive
2000/14/EC	Noise emission in the environment -

Measured sound power level on machines representative of this type Applied conformity assessment procedure according to Annex VIII Technical documentation archive location: MK6 1NE	109 dB (A)

Applied harmonised standards, in particular:

EN 12100-1:2010	Safety of machinery. Basic terminology and methodology
EN 16228-1:2014	Drilling & foundation equipment. Common requirements
EN 16228-4:2014	Drilling & foundation equipment. Foundation Equipment
EN 16228-7:2014	Drilling & foundation equipment. Interchangeable auxiliary equipment

Signed by on behalf of DCP

Name / Position DAVID BROWN - MANAGING DIRECTOR

Date / /

Dawson Construction Plant Ltd
Chesney Wold, Bleak Hall, Milton Keynes MK6 1NE, ENGLAND
Tel: (+44) 1908 240300 Fax: (+44) 1908 240222
E-Mail: dawson@dcpuk.com Website: www.dcpuk.com

basic technical specifications

SPECIFICATIONS	EMV300	
UNITS	METRIC	US
STATIC MOMENT	4.6 kgm	400 in lbs
FREQUENCY	2,400 rpm	
CENTRIFUGAL FORCE	300 KN	67,420 lbs.F
AMPLITUDE	14.7 mm	0.58 in
REQUIRED HYDRAULIC FLOW RATE *	130 L/min	35 gpm
MIN. HYDRAULIC PRESSURE	280 bar	4,060 psi
MAX. HYDRAULIC PRESSURE	350 bar	5,076 psi
MIN. HYDRAULIC POWER	60 kW	80 hp
DYNAMIC MASS	625 kg	1,380 lbs
TOTAL MASS	965 kg	2,123 lbs
MAX. PILE MASS	800 kg	1,760 lbs
MAX. PUSH/PULL FORCE	15,000 kg	33,600 lbs
CLAMP FORCE	36 tonne	
TYPICAL EXCAVATOR WEIGHT	12 to 35 tonne	13 to 39 ton

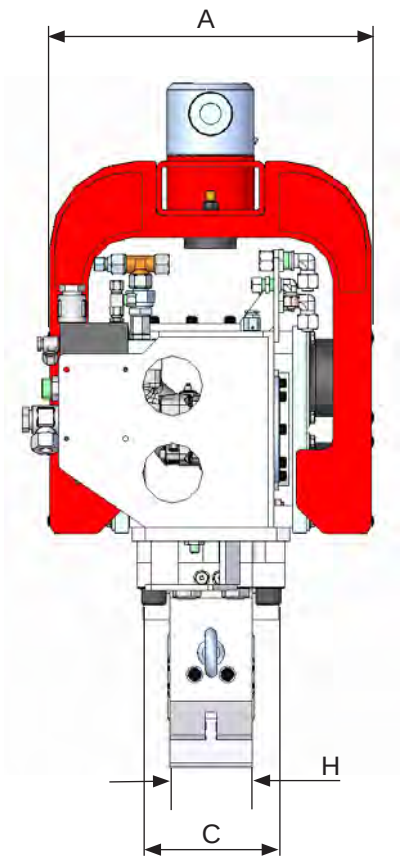

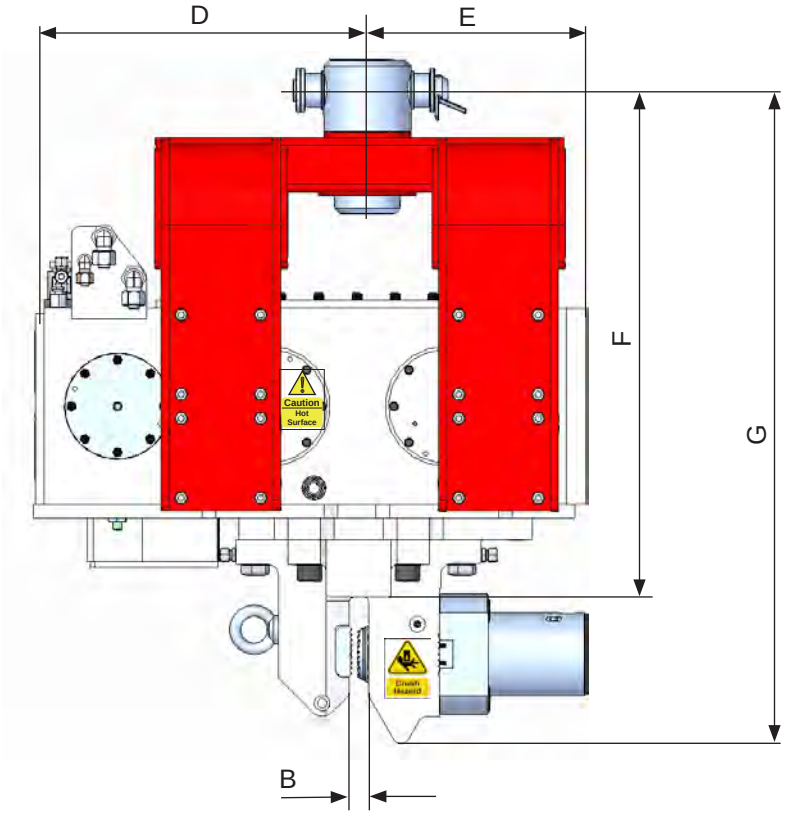

DIMENSIONS	A	B	C	D	E	F	G	H
mm	615	25	250	582	429	927	1200	150
in	24	1	10	23	17	36.5	47.25	6

basic safety points

- The vibrator should only be operated by suitably qualified personnel.
- The vibrator/clamps should not to be used for lifting operations.
- It is prohibited to leave an element suspended in the clamps of a vibrator, which is free hanging and out of operation.
- Don not leave the vibrator clamped on a pile without being attached to the excavator.
- Extraction pulling force should not to be exceeded.
- Pile to be secured to the lifting chain of equal lifting or greater capacity to the load held in the clamp.
- It is prohibited to use vibrator as an impact hammer, by hammering with open clamp.
- There should be visual contact between operator and slinger (banksman) at all times.
- Monitor the piling operation constantly – stop the process immediately if any danger occurs.
- Do not operate the vibrator if any person is within the High Risk Area – see high risk definition.
- Consider machine stability at all times.
- The operator should inspect the equipment for defects every day and before being taken in to service. Any defects that affect operational safety should be corrected before the equipment is taken into service – see operating instructions.
- Pay attention to the Safe Working Load of all lifting accessories at all times. (See auxillary equipment).
- The working area should be properly illuminated.
- Work safely at all times and within the requirements of all local legislation.
- The vibrator can become very hot during operation – do not touch it unless wearing appropriate protective clothing.

WHO IS RESPONSIBLE?

Those who are in charge of, or responsible for, the use and maintenance must ensure that the vibrator and all it's auxiliary equipment are in good condition.

Piling should only be carried out under the supervision of an appropriately qualified and experienced person who can assess that the work is carried out safely.

The excavator operator must ensure that his communication signals are understood, by those on the ground, and followed. During piling operations he must watch out for any potential hazards.

WORKING CONDITIONS / ADVERSE WEATHER CONDITIONS

Vibrators should only be operated and driven on firm ground with clear visibility of the working area and the process monitored constantly. Operators must have a clear understanding of the site assessment and method statement. This assessment will cover risks and site actions that have been implemented for the event of adverse weather conditions. The vibrator stand must stay upright on level ground (at all times) to avoid personnel injury.

WORKING NEAR UNDERGROUND / OVERHEAD OBSTACLES

Before the start of any piling work it is up to the contractor to identify if there are any underground cables, utilities and overhead obstacles within the working area which could be dangerous to personnel, including but not limited to live electrical cables. This should be fully covered in the site specific method statement. All personnel on site should have a full understanding of the risks. In the case of unforeseeable contact or damage of an underground / overhead obstacle, then work must stop immediately and the person in charge informed.

THE HIGH RISK AREA

This is an area defined as that being within an approximate radius of the vibrator which is calculated by the following formula: Pile length (m) + ½(Pile Length)

This area can be either this or within the slewing radius of the excavator, whichever is greater. The High Risk Area is active while the vibrator is working or the excavator is in operation. (Please refer to operator's instruction for full details)

Personnel are at risk when within this area from:
• Falling piles – should the pile be handled incorrectly
• Liquids under high pressure and associated components
• Mechanical failures of equipment components
• Noise – wear ear protection equipment when inside this area
• Unexpected movement of the excavator (slewing, overturning)

TRANSPORTING THE VIBRATOR

When transporting the vibrator, ensure it is placed correctly in the stand. Once in place on the stand the jaws must be closed. Release the hydraulic hoses from the excavator (the hard jaws will remain closed) and cap the hose ends to prevent contamination. Disconnect the vibrator from the excavator.

TRANSPORTING PILES ON SITE

Transporting a pile using the vibrator should only be done over a small distance, with the clamp fully engaged on the pile top and with the lifting chain fitted. The load should be carried as close to the ground as possible to minimise falling risk. Should the grip on the pile be reduced during this procedure, the excavator must stop, and a better grip effected. Should a pile slip then the lifting chain could snap and cause an accident.
When transporting a pile extreme care must be taken to ensure that no one is in the High Risk Area and that the pile is handled in such a way as to ensure no danger to site personnel at any time.
In order to avoid extensive transporting, have the piles laid out as close to the point of installation as possible.
Do not use the excavator with the EMV300 installed to handle bundles of piles around the job site. The maximum pile weight allowed to be transported by each EMV model is shown in the table below:

	MODEL				
	EMV70	EMV220	EMV300	EMV450	EMV550
MAX PILE MASS	800kg	800kg	800kg	1,000kg	1,400kg
LIFTING CHAIN SWL (t= 1000kg)	3.2t	3.2t	3.2t	1.6t STD CHAIN 3.2t ADAPTOR	1.6t STD CHAIN 3.2t ADAPTOR

IMPORTANT:- READ FULL OPERATING INSTRUCTIONS @ WWW.DCPUK.COM

SAFETY FIRST

Basic Safety Points

The vibrator should only be operated by suitably competent personnel.

There should be visual contact between operator and banksman at all times.

Monitor the piling operation constantly - interrupt the process immediately if any danger occurs.

Do not operate the vibrator if any unauthorised personnel are within the HIGH RISK AREA. = (Pile length + ½ Pile Length) or within the slewing radius of the excavator.

Consider machine stability at all times.

The operator should inspect the equipment for defects every day and before being taken into the service.

Any defects that affect operational safety should be corrected before the equipment is taken into the service

Pay attention to the Safe Working Load of all lifting accessories at all times.

The working area should be properly illuminated.

Work safely at all times and within the requirements of all local legislation.

The vibrator can become very hot during operation - do not touch it unless wearing appropriate protective clothing.

The maximum weight of pile that can be used with the;
EMV70, 220, 300 = 800kg
EMV450 = 1000kg
EMV550 = 1400kg

The most important hose on the machine is the drain line which must be fed either directly into the hydraulic tank in the excavator or connected to the breaker circuit return line. (Recommended Ø1/2” hose minimum).

WARNING!
IT IS IMPERATIVE THAT THE DRAIN LINE IS NOT RESTRICTED AS THIS WILL CAUSE THE BUILD UP OF PRESSURE WHICH WILL DAMAGE THE MOTOR.

Responsibility

Those who are in charge of, or responsible for the use and maintenance must ensure that the vibrator and all its auxiliary equipment are in good condition.
Piling should only be carried out under the supervision of an appropriately qualified and experienced person who can assess that the work is carried out safely.
The excavator operator must ensure that his communication signals are understood, by those on the ground, and followed. During piling operations he must watch out for any potential hazards.

The equipment is hired under C.P.A. conditions and as such any theft or damage caused by misuse or abuse will be charged accordingly.

IN THE EVENT OF MALFUNCTION, DAMAGE OR LEAKAGE OF OIL, DAWSON CONSTRUCTION PLANT MUST BE NOTIFIED IMMEDIATELY.

Operating Procedures Summary - Read Full Operating Instructions at www.dcpuk.com

Allow the excavator engine to warm up, particularly in temperatures below 10°C.

Pay daily attention to the general condition of the hard jaws (vibrator clamp). Ensure they are replaced once signs of wear are apparent. Check for loosened connections daily.

Check both the vibrator and auxiliary equipment for damage. Pay particular attention to the lifting chain assembly. Any defects should be immediately notified to the person in charge. DO NOT OPERATE A DAMAGED UNIT. The Ø40mm hole in the pile for the lifting chain must be spaced 250mm from the top of the pile to avoided clash with the EMV jaws.

Refusal - Under normal conditions, refusal is defined when the time taken to drive a pile 250mm exceeds 5 minutes. The penetration distance of 250mm is absolute, i.e. No conversion is allowed, for instance, 20 minutes for 1m penetration.
Rebound - This occurs when a large proportion of the hammers energy is reflected back up through the pile as a result of hitting an impenetrable layer or obstruction. The reflected forces will be transferred back into the hammer and the suppressor head, and as a result, the head will start "jumping" relative to the vibratory case. In this situation driving should be stopped immediately.

If the pile reaches premature refusal then it will be necessary to loosen up the ground, possibly through drilling. UNDER NO CIRCUMSTANCES SHOULD THE PILE BE FORCED FURTHER. Alternatively a larger piling device should be used.

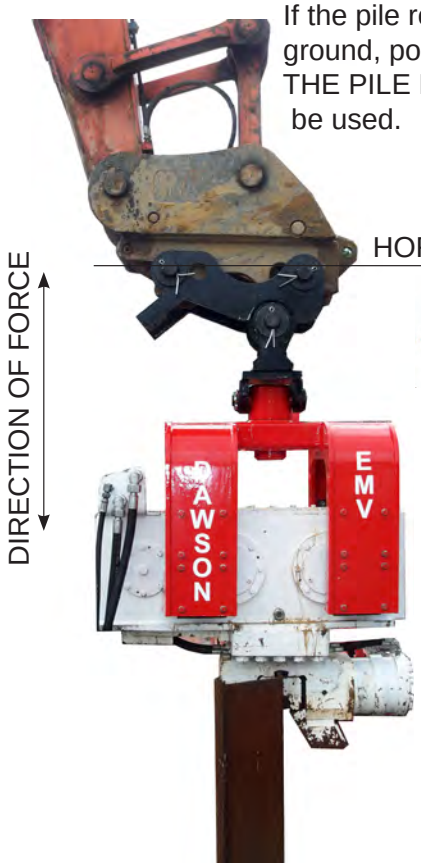

WARNING!
The postion of the quick hitch to the dipper arm.
The quick hitch should always be horizontal, with the direction of force being vertical as shown. Incorrect alignment could result in serious part failure and risk to life!

	EMV	70	220	300	450	550
MAXIMUM PUSH/ PULL LOADING	lbs	6,171	16,500	33,600	33,600	49,500
	kg	2,800	7,500	15,000	15,000	22,500

For completness, the flow and pressure from the excavator to the EMV should be checked against the specification sheets to confirm adequate hydraulic power. As a guide the EMVs typically suit the following base machine sizes:

EMV70 (requires 30 L/min, 240 bar)	~ 5.5 - 17 t excavator
EMV220 (requires 90 L/min, 280 bar)	~ 7 - 18 t excavator
EMV300 (requires 130 L/min, 280 bar)	~ 13 - 25t excavator
EMV450 (requires 195 L/min, 270 bar)	~ 25 - 45t excavator
EMV550 (requires 256 L/min, 280 bar)	~ 30 - 55t excavator

Daily Maintenance

Grease all grease points - Clamp Cylinder, Saddle Swival, Dipper Pins.

Check the screws, bolts, fitting etc. for tightness.

Check hydraulic hoses for leaks.

Check oil level in the excavator hydraulic tank.

Check the gear oil level in the vibrator. The level must be halfway up the sight glass (change oil ever 50hrs).

Check lifting chain coupler and chain clamp for damage, wear and tear.

For full details read operators instructions & spare parts manuals, available to view or download at www.dcpuk.com

DAWSON
CONSTRUCTION PLANT LTD
Dawson Constrcution Plant
Chesney Wold.
Bleak Hall,
Milton Keynes,
MK6 1NE, England
Tel: +44 (0) 1908 240300
Fax: +44 (0) 1908 240222
www.dcpuk.com

how does the emv work?

Modern pile vibrators basically work in the same way. Pairs of high-speed contra-rotating eccentric weights are geared together so as to produce net vertical vibratory forces.

The vibrations produced are transmitted to the pile through a powerful hydraulic grip. Consequently the pile is vibrated at the same speed and displacement (or movement) as the gearbox itself. This vibration effect is transmitted to the pile tip where the surrounding soils become almost fluid like.

The fluidising effect on the soil permits particles to shuffle themselves around creating some spaces for the pile to move into. This combined with the weight of the pile and vibrator is adequate to push the pile into the ground.

Not all soil types will however fluidise. Clays soils are very cohesive and extremely dense by comparison to sands and gravels where vibrators work best. The dense clay soil does not allow soil particles to shuffle themselves around so no fluidising effect can occur. Also the ground effectively sticks itself to the pile and much of the power generated is lost in shaking the ground.

The EMV is particularly effective for its size and weight because it is able to utilise the crowd force available from the excavator to add further push force to the pile.

The gearbox in the EMV unit is driven by a hydraulic drive motor that receives hydraulic power from the excavators bucket ram circuit. Typically this circuit will be able to supply adequate working pressure but excessive amount of oil flow rate. The EMV has a built-in flow regulator that limits the oil flow rate supplied to the drive motor so that the gearbox can not be run too fast. This is essential to prevent excessive bearing loads and correct performance of the unit.

In addition, the flow regulator has a sequence valve built-in that will not allow the vibrator to run until adequate clamping force has been applied to the pile – an essential safety feature. This simplified hydraulic system enables simple installation and reliable performance.

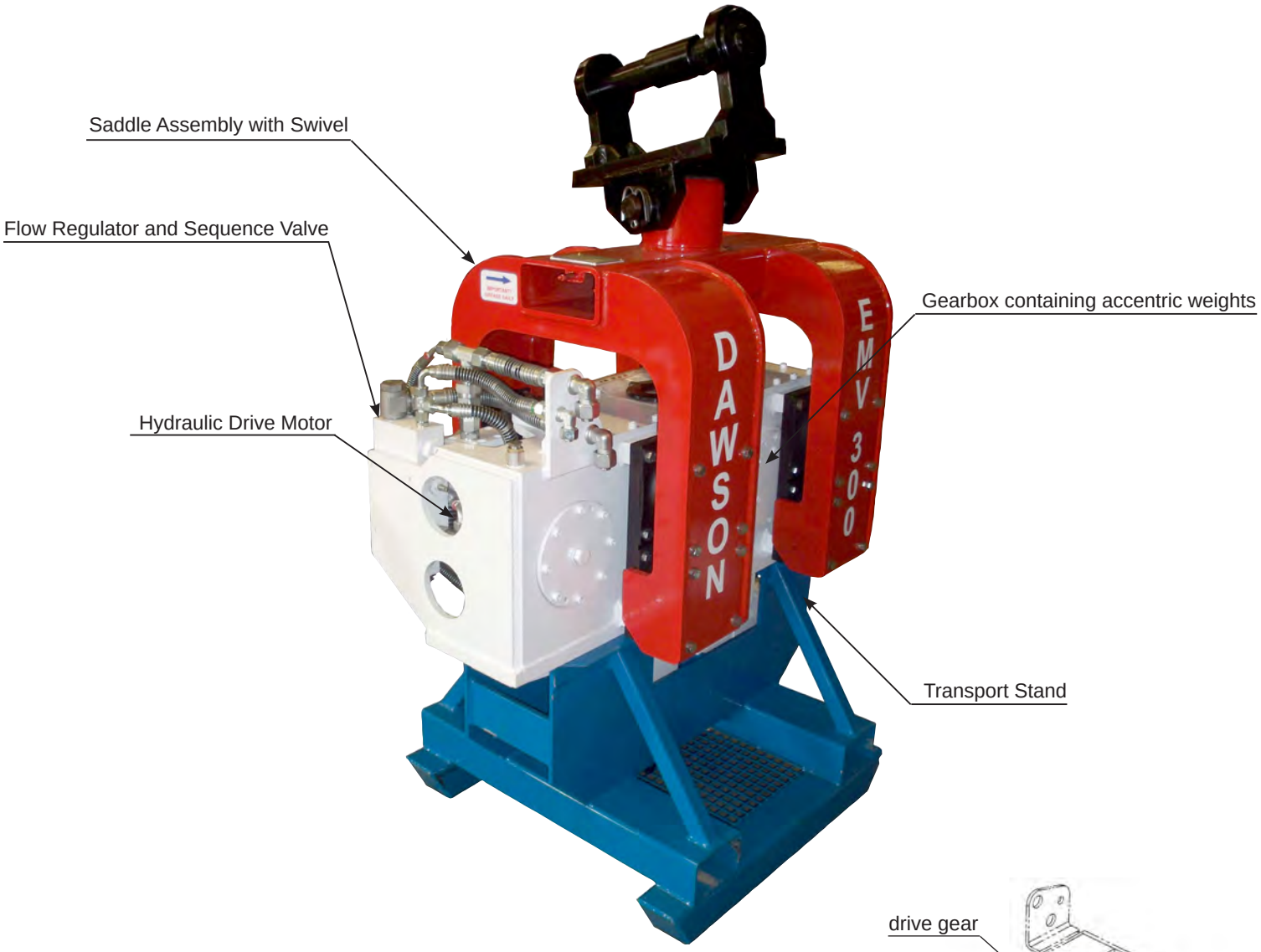

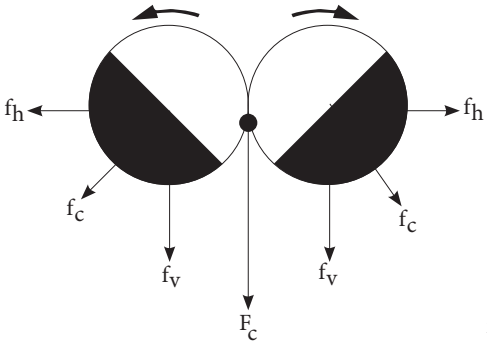

no. 1

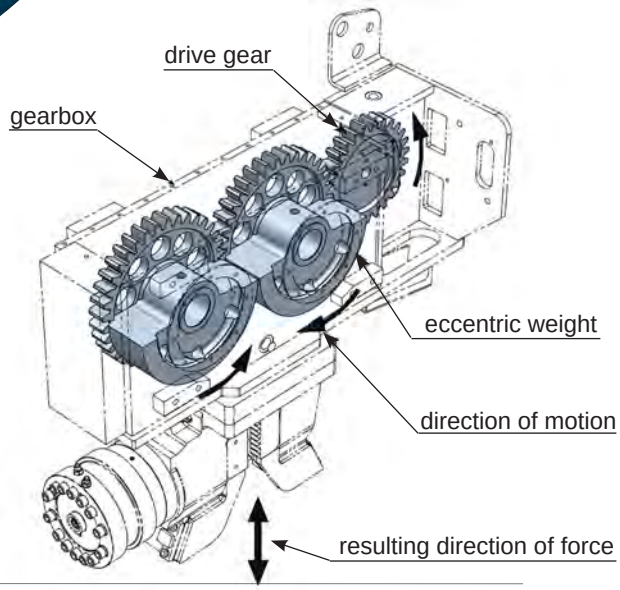

Motion of a pair of eccentrics

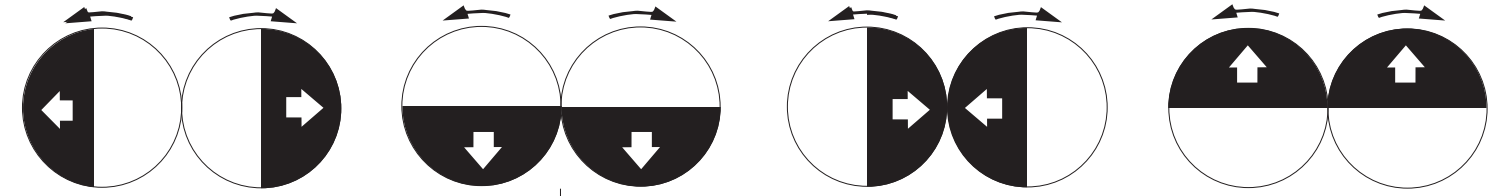

Corresponding Sinusoide

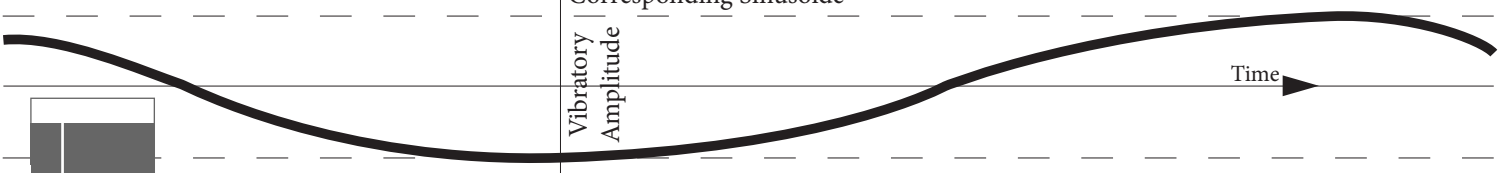

no. 2

The excavator hydraulic power output must be matched to the requirements of the vibratorbefore installation. A standard excavator enquiry sheet is available for the user to complete prior to considering the suitability of the excavator for use with the EMV300.

MOUNTING THE VIBRATOR

The vibrator is mounted in place of the excavator's bucket, and should be allowed to hang freely once installed. Remove the bucket prior to installing the EMV.

A shear pin is used to fix the vibrator to the boom via an adaptor bracket. Different adaptor brackets may be required for different excavators. Check this prior to the start of installation. If the excavator is fitted with a quick hitch it will either be necessary to remove it or purchase half a quick hitch and modify to suit the Dawson adaptor bracket.

Standard brackets are available for different machine size ranges. Typically, one of these brackets can be adapted to fit a variety of different pin sizes and dipper end widths by using a kit of bushes and spacers.

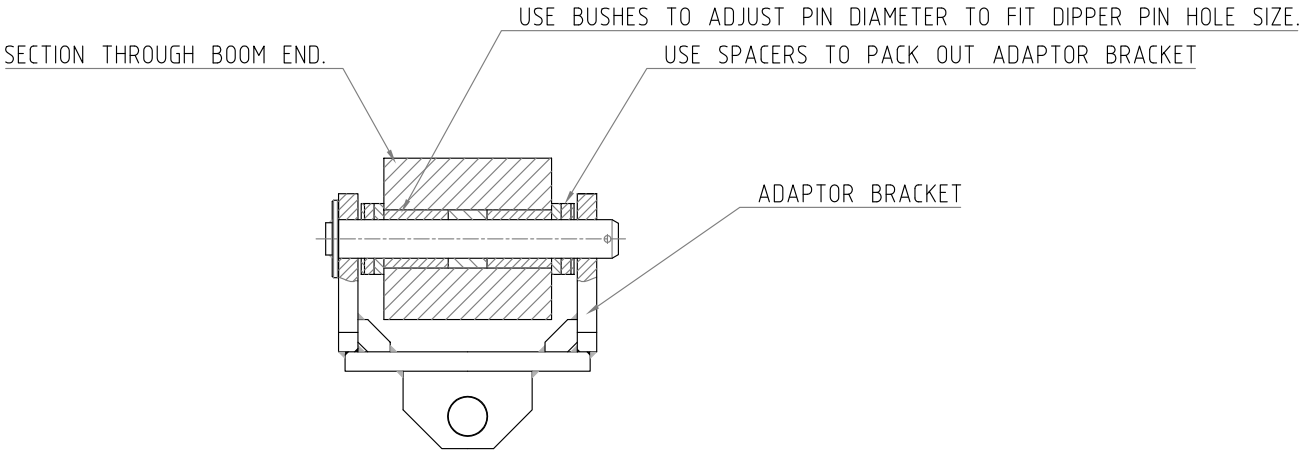

HYDRAULIC HOSES - LAYOUT & CONNECTIONS

The pressure line is usually connected to the bucket ram "extend" circuit and the return line to the bucket ram "retract" circuit. The third, and smaller, drain line is fed either directly back into the hydraulic tank on the excavator, or connected to the breaker circuit return line. Excavators will rarely have the same fittings as these on their bucket circuit so adaptor fittings must be used.

continued - mounting instructions

Ensure all hydraulic connections are clean prior to fitting and that no contamination is introduced into the hydraulic circuit during installation – this may cause internal component damage to the hydraulic system or faulty operation of the vibrator or excavator.

If quick release couplings are installed on the excavator they should be replaced. It is strongly recommended that quick release couplings are not used for this application. For permanent installation ball valves can be added to the excavator boom to ensure rapid changing between bucket and EMV hydraulic function. As the bucket ram is no longer in use, it should be retracted and fastened down.

WARNING: THE DRAIN LINE MUST FLOW DIRECTLY TO TANK WITHOUT RESTRICTION. FAILURE TO DO SO WILL RESULT IN THE HYDRAULIC DRIVE MOTOR BLOWING ITS CASING SEAL OR FRONT CASING CASTING – THIS DAMAGE IS VERY COSTLY TO REPAIR.

The EMV is fitted with a motor case blow-off valve. This valve is effectively a check valve that vents some oil to atmosphere should the motor case drain line pressure exceed approximately 6 bar. It is not a pressure protection valve and is intended only as an early warning valve, giving a visual signal that something is wrong. Any sign of this and use of the EMV should be halted immediately and the cause investigated.

The blow-off valve does not guarantee the motor will be protected in all circumstances!

PREPARATIONS - BEFORE DRIVING / EXTRACTING PILES

It is the excavator operator's responsibility to ensure that the equipment is functioning and performing correctly and that the EMV method of piling is implemented efficiently.

In order to meet this responsibility please note the following points:

a. Bundles of sheet piles should be set out on the job site so as to minimise the amount of handling and travelling required with the EMV.

b. Ensure that all piles have Ø40mm(Ø1½") holes cut in them approximately 250mm(10") down from the top edge and central prior to commencement of the piling operation.

c. Allow the excavator engine to warm up, particularly in temperatures below minus 10°C and warm the excavators hydraulic system by, for example, tracking backwards and forwards – this avoids the EMV's blow-off valve spitting oil on initial start-up.

d. Before work commences slowly operate the bucket ram lever in both directions. It is particularly important that the vibrator is allowed to run freely for approximately 30 seconds, this allows the gearbox oil to reach all the necessary lubricating points.

e. Review section "Basic Safety Points" in this manual before starting work.

f. Review section "Daily Maintenance" before taking the equipment into service.

g. It is particularly important that you make sure that during a piling operation the vibrator is kept directly above and in line with the pile, otherwise the piling energy is transferred to the excavator arm and causes unnecessary wear and may lead to pile damage.

DRIVING PILES

a. Ensure that all safety procedures and maintenance have been carried out before starting the excavator – see above.

b. Ensure that it is safe to move the dipper arm. Release the stand from the jaws of the vibrator by operation of the retract bucket ram control function in the cab. Manoeuvre the vibrator above one end of the pile to be pitched, so that there is enough distance to allow safe insertion of the lifting chain through the hole at the top of the pile.

c. Manoeuvre the vibrator above one end of the pile to be pitched, so that there is enough distance to allow safe insertion of the lifting chain through the hole at the top of the pile.

d. Check which way around the pile has to be lifted before inserting the lifting chain – was the previous pile pitched left or right handed? Insert the lifting chain correctly (no twists, knots etc) through the lifting hole in the pile and finally with the chain clamp. Allow enough free chain length for the pile to rotate to vertical during the lifting process without jamming against the underside of the clamp body. If this happens the chain will be overloaded, may subsequently break and allow the pile to fall – this is a sever hazard to all site personnel and must be avoided at all times. Do not allow too much chain so that the top of the pile hangs too far away from the clamp when it is raised to the vertical – this will make it difficult to engage the pile in the clamp.

e. Clear all personnel standing in the High Risk Area and lift up the pile until it just hangs freely off the ground.

f. Lower the pile slowly so that the pile can be correctly inserted into the clamp. Once firmly inserted, close the jaws.

g. Manoeuvre the pile to the insertion point and push the pile slowly into the ground. Plumb the pile and ensure all personnel are out of the High Risk Area.

h. Start the vibrator and adjust (crowd) the hydraulic rams so that the vibrator is level and always sits directly on top of the pile as it goes into the ground. Do not over push the vibrator - stop pushing when the gearbox starts to vibrate against the rubber stops on the underside of the saddle (the deflection is 146mm (5.75”).

i. When the pile has reached the required depth turn the vibrator off by returning the control lever to the central position and allow all vibrations to stop. Release the hard jaws from the pile by slowly operating the control lever in the opposite direction. Do not operate the control lever from one extreme position to the other whilst the EMV is running – it will cause hydraulic system pressure spikes to occur.

j. Remove the chain clamp and lifting chain from the pile lifting hole.

k. Repeat steps c-j to continue.

l. When piling progress is less than 100mm/min (4ins/min) release ground resistance by augering or by water jetting. Under no circumstances should the pile be forced any further.

EXTRACTING PILES

a. Ensure that all safety procedures and maintenance have been carried out before starting the excavator.

b. Ensure that it is safe to move the dipper arm. Release the stand from the jaws of the vibrator by operation of the retract bucket ram control function in the cab. Manoeuvre the vibrator above one end of the pile to be extracted so that there is enough distance to allow safe insertion of the lifting chain through the hole at the top of the pile. Confirm suitable hole in pile.

c. Insert the lifting chain correctly (no twists, knots etc) through the lifting hole in the pile and secure with the chain clamp. Allow enough free chain length for the pile to rotate to horizontal during the lowering process without jamming against the underside of the clamp body. If this happens thechain will be overloaded, may subsequently break and allow the pile to fall – this is a sever hazard to all site personnel and must be avoided at all times.

Under no circumstances should a pile be pulled using the lifting chain only.

d. Clamp the vibrator onto the pile head ensuring that it is level. Ensure all personnel are out of the High Risk Area.

e. Start the vibrator and allow the soil to loosen around the pile. Start to lift up the pile. Ensure the pile clutches are not rubbing together. Pay attention to the distortion of the rubber sandwich mounts - under no circumstances should these mounts be allowed to deflect by more than the stipulated amount shown on Figure 1 in section 2.0. Reduce the extraction force to continue pulling. Continue extracting the pile until the pile foot is almost extracted. Stop vibration at this point and carefully pull the pile out the remaining short distance.

f. Move the pile to a suitable area, and place the pile on the ground. Ensure that all personnel are out of the High Risk Area.

g. Hold the pile on the ground and release the jaws. Raise the vibrator off the pile slowly ensuring that there is no snatch on the lifting chain. Slowly lower the pile towards the ground.

h. Remove the chain clamp and lifting chain from the pile lifting hole.

i. Repeat steps c-h to continue.

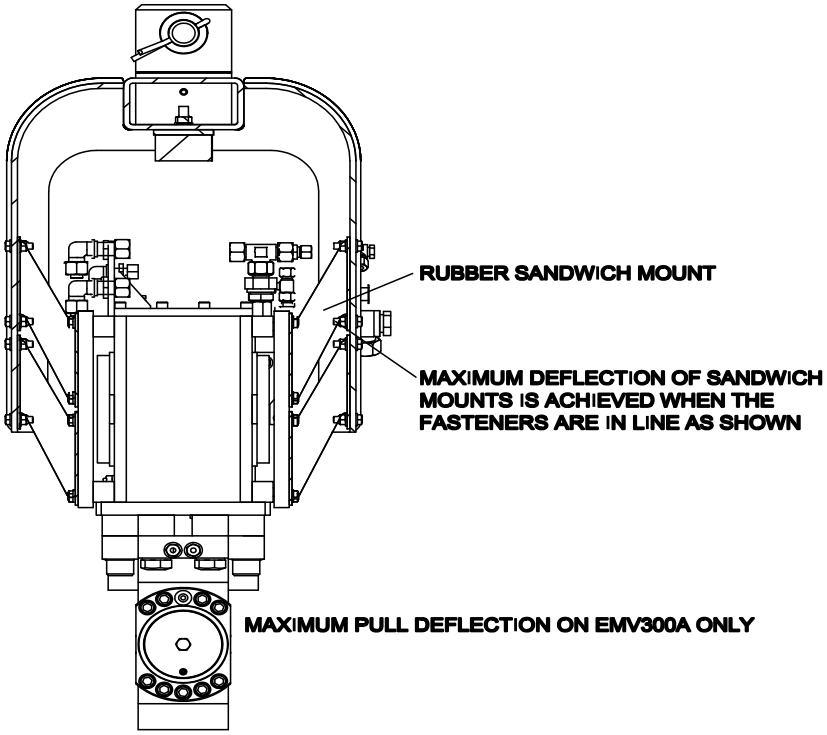

Maximum deflection of sandwich mounts is achieved during driving when the gearbox casing hits the safety stops (140mm). When extracting piles a maximum deflection of 146mm can be achieved. This is when the top fasteners are inline with the lower.

operating instructions driving piles (quick reference illustrations)

The illustrations below are to show visually a simplified version of the operating instructions given in part driving / extracting piles. Preparation before driving / extracting piles must be read before these illustrations.

Set out bundles of piles on the job sites to minimise the amount of handling time and travelling.

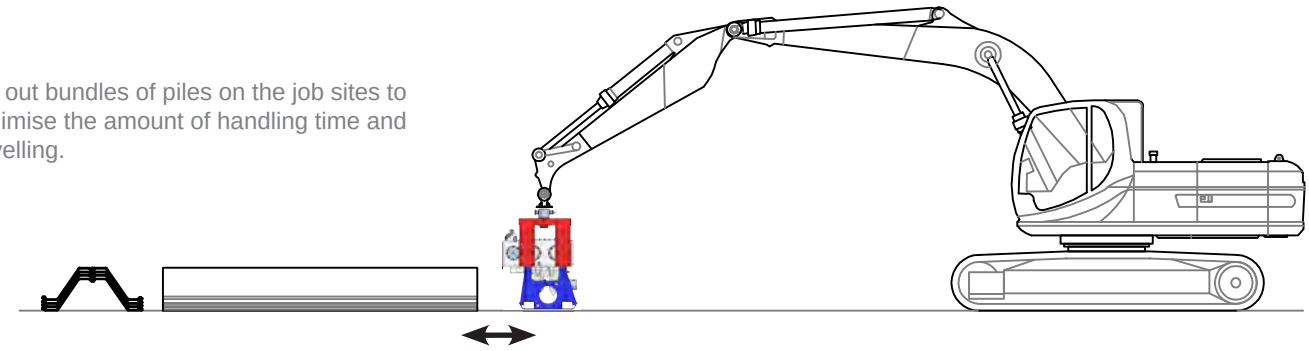

Ensure it is safe to move the dipper arm. Release the stand from the jaws of the vibrator by operating the retract bucket ram control function in the cab.

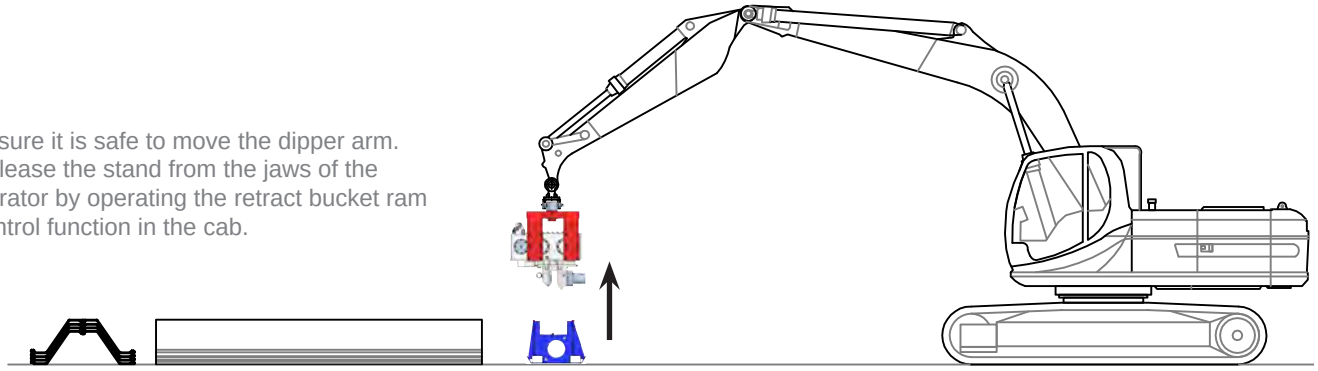

Move the vibrator to the pile to pitched. Leave enough room for the safe insertion of the lifting chain.

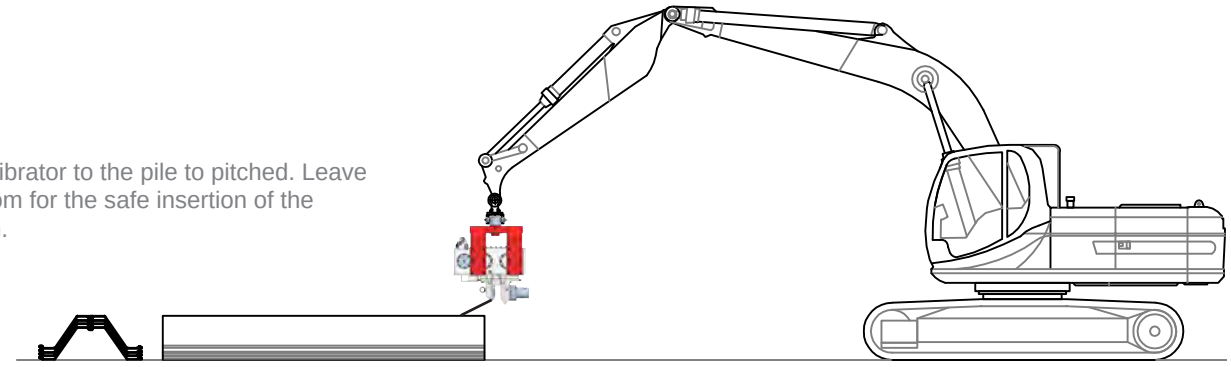

Insert lifting chain correctly to safety standards

Clear all personnel standing in high risk area.

Lift pile up till free hanging above ground..

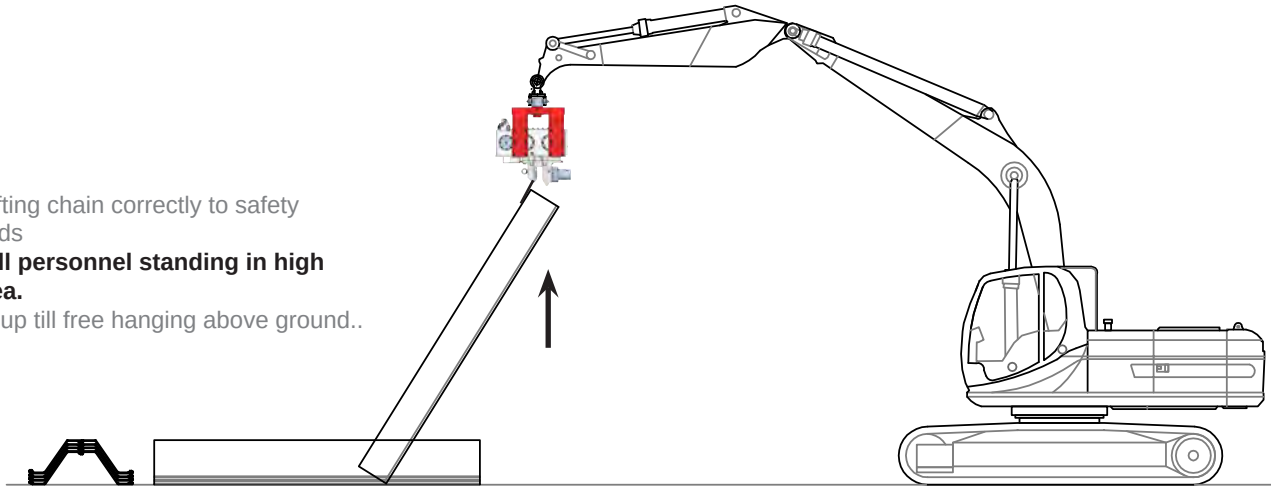

Lower the pile slowly so that the pile can be correctly inserted into the clamp. Once firmly inserted, close the jaws.

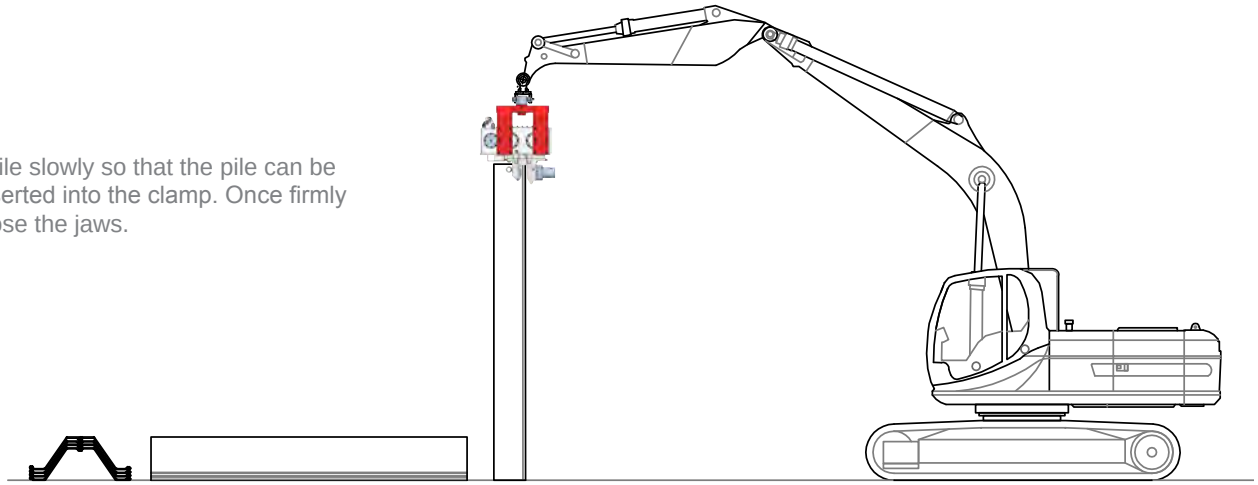

Manoeuvre the pile to the insertion point and push the pile slowly into the ground. Plumb the pile then ensure all personnel are out of the High Risk Area.

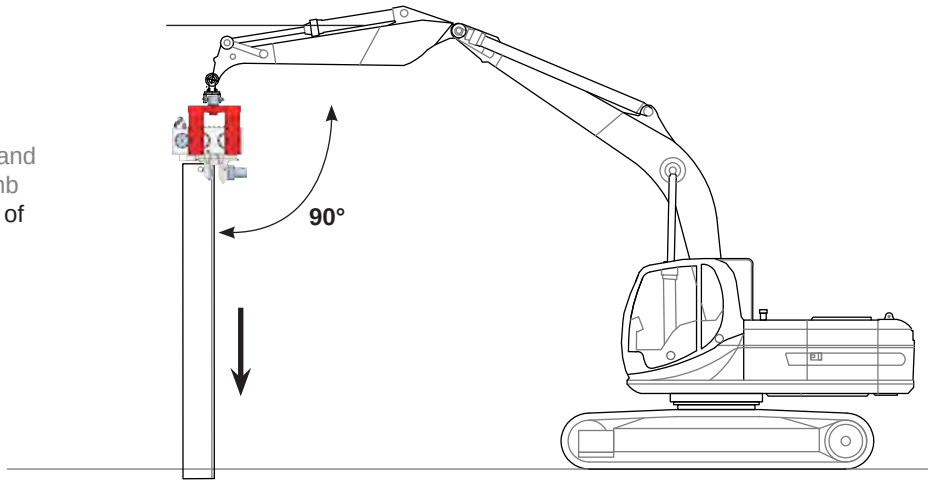

Start the vibrator and adjust (crowd) the hydraulic rams so that the vibrator is level and always sits directly on top of the pile as it goes into the ground.

When the pile has reached the required depth turn the vibrator off by returning the control lever to the central position and allow all vibrations to stop.

Remove the chain clamp and lifting chain from the pile lifting hole.

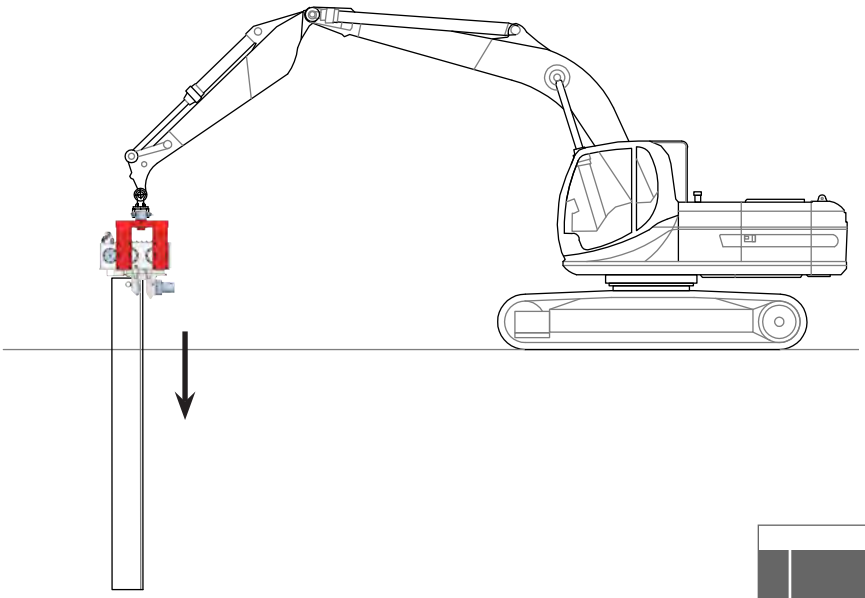

operating instructions - extracting piles (quick reference illustrations)

The illustrations below are to show visually a simplified version of the operating instructions given in part driving / extracting piles. Preparation before driving / extracting piles must be read before these illustrations.

Ensure it is safe to move the dipper arm. Release the stand from the jaws of the vibrator by operating the retract bucket ram control function in the cab.

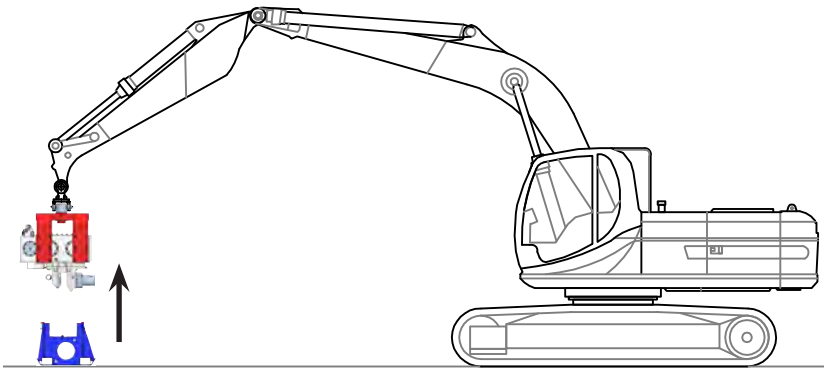

Move the vibrator to the pile to be extracted. Leave enough room for the safe insertion of the lifting chain.
Clear all personnel standing in high risk area.

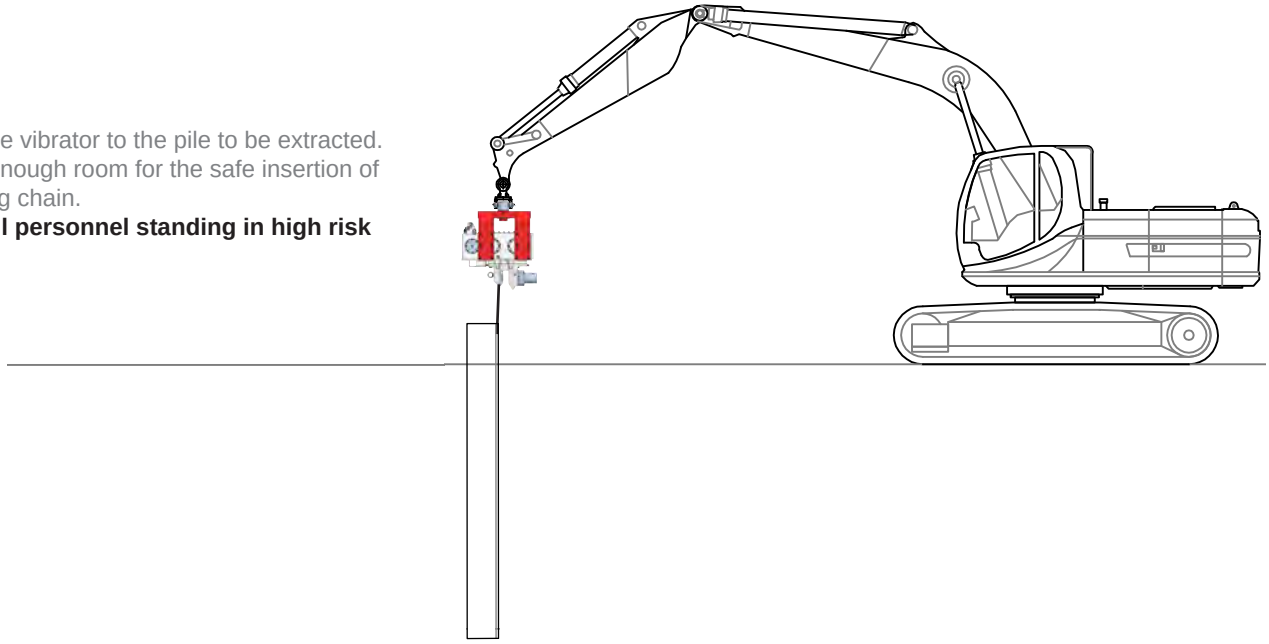

Under no circumstances should a pile be pulled using the liftin chain.

Clamp the vibrator onto the pile head ensuring that it is level.

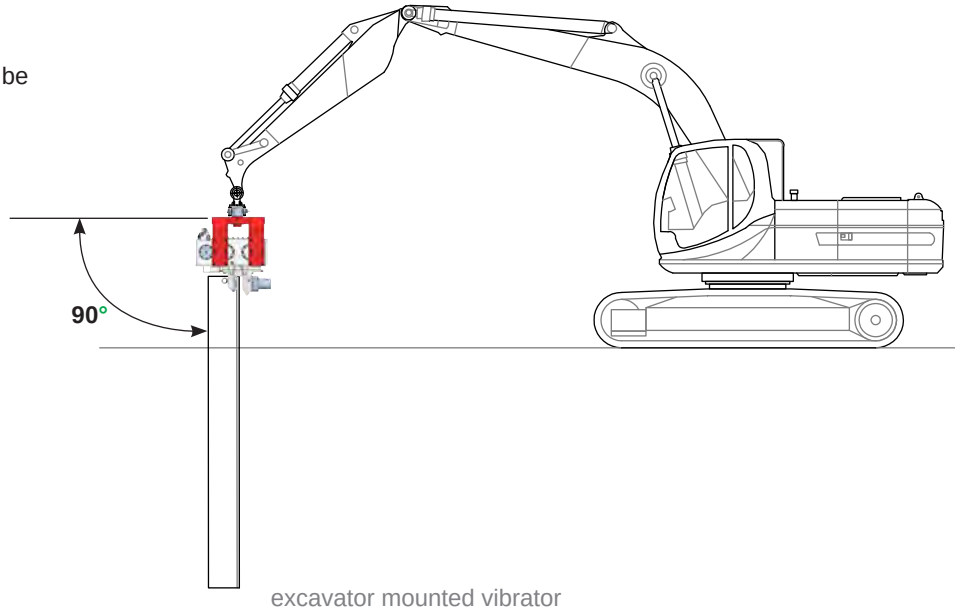

Start the vibrator and allow the soil to loosen around the pile. Start to lift up the pile. Ensure the pile clutches are not rubbing together. Pay attention to the distortion of the rubber sandwich mounts - under no circumstances should these mounts be allowed to deflect by more than the stipulated amount shown in illustration. If these mounts are deflected by more than the specified amount on the EMV reduce the extraction force to continue pulling. Continue extracting the pile until the pile foot is almost extracted. Stop vibration at this point and carefully pull the pile out the remaining short distance.

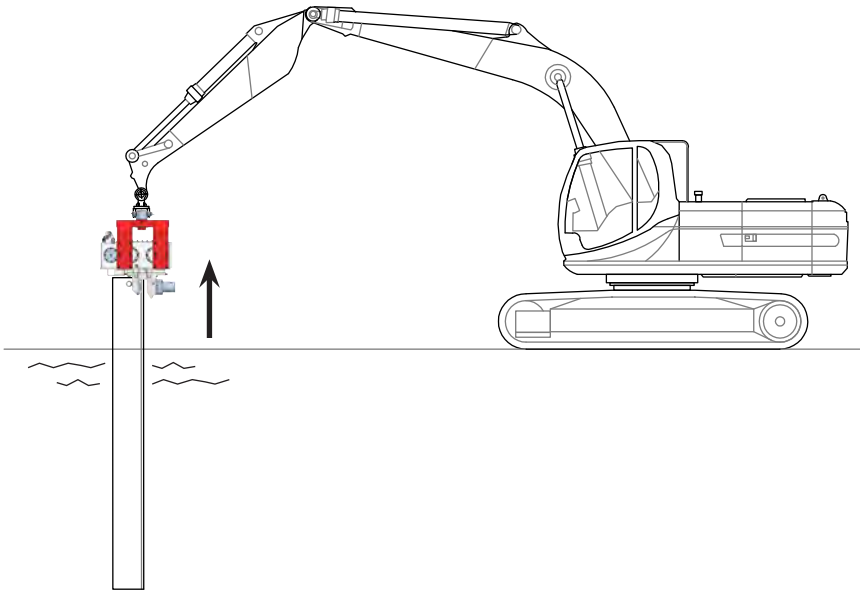

Move the pile to a suitable area, and place the pile on the ground. Ensure that all personnel are out of the High Risk Area.

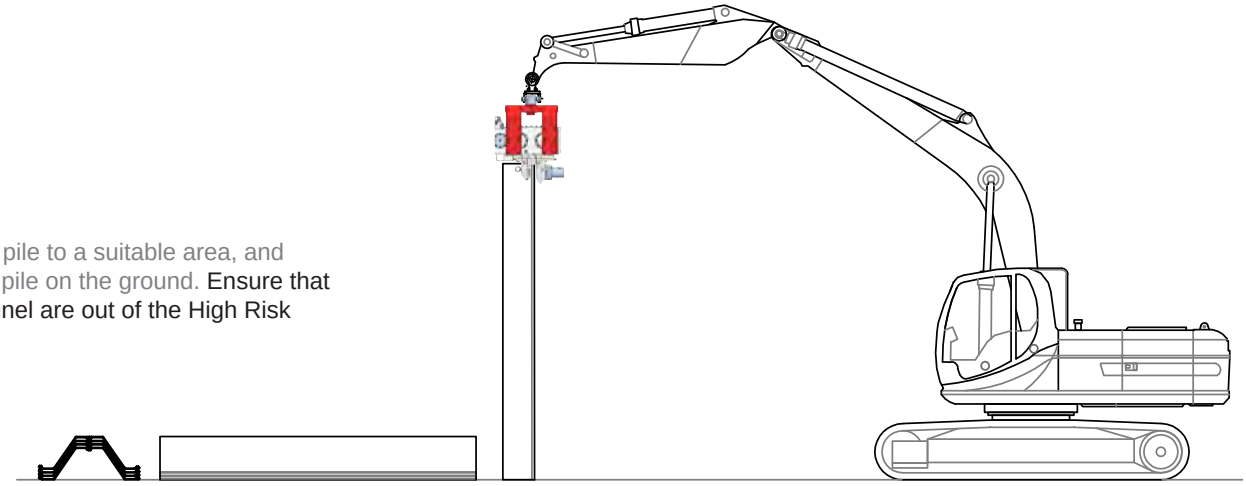

Hold the pile on the ground and release the jaws. Raise the vibrator off the pile slowly ensuring that there is no snatch on the lifting chain. Slowly lower the pile towards the ground.

Remove the chain clamp and lifting chain from the pile lifting hole.

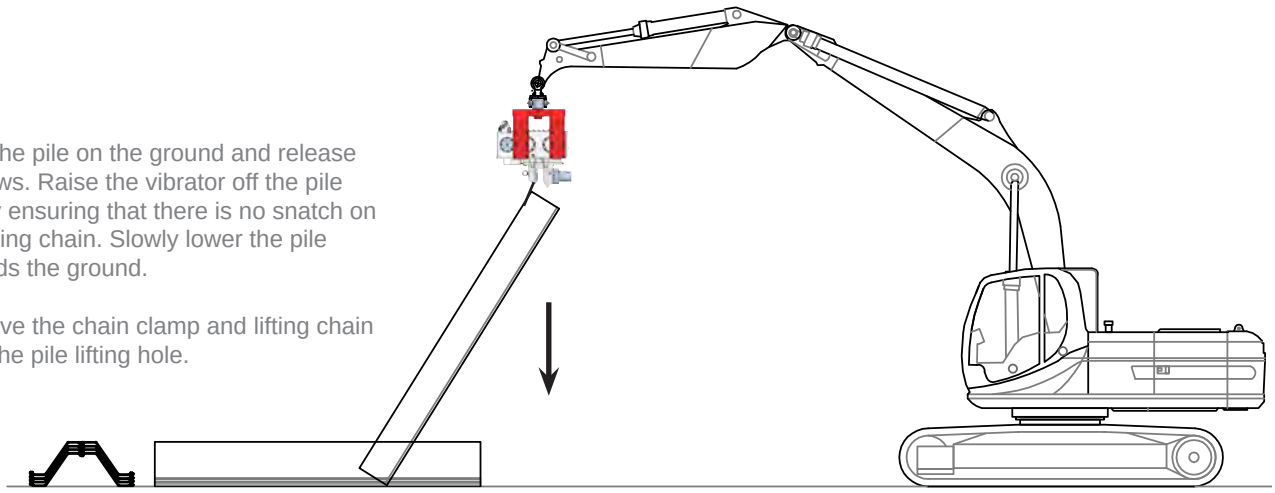

recommended excavator positions (quick reference illustrations)

These illustrations represent the recommended working, transport and resting positions for your Dawson EMV attachment when used with an excavator.

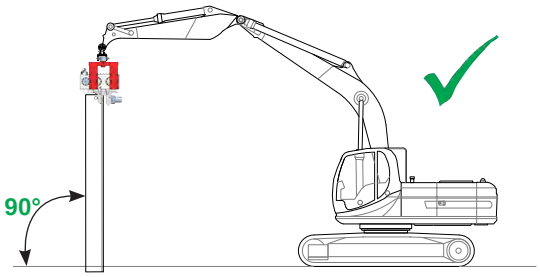

Recommended: Starting Position
Position the pile vertically in desired location and begin drive / extracting.

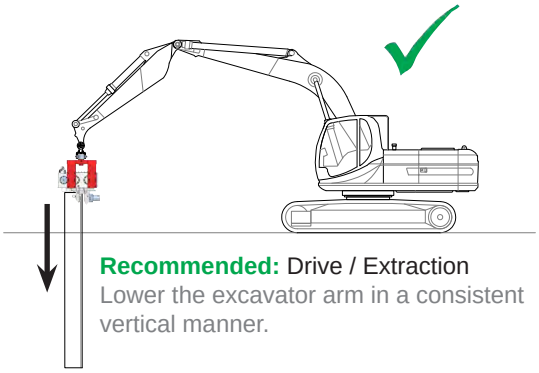

Recommended: Drive / Extraction
Lower the excavator arm in a consistent vertical manner.

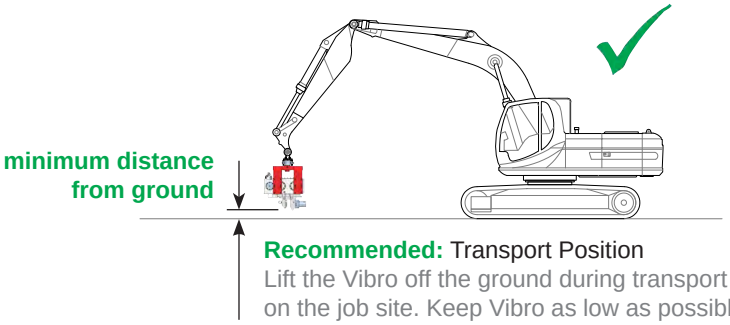

Recommended: Transport Position
Lift the Vibro off the ground during transport on the job site. Keep Vibro as low as possible.

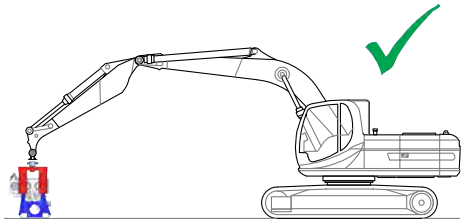

Recommended: Resting/Parting Position
Park the excavator with the vibro in its stand.

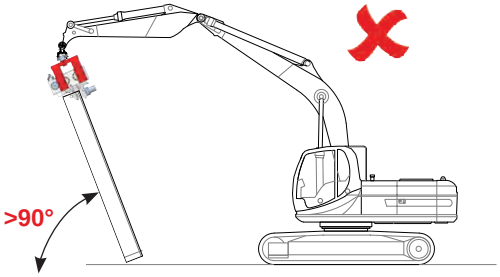

Avoid: Driving / Extraction Position
Avoid any driving / extrating postion that is not vertical. Vibro will become unstable and not easily controlled

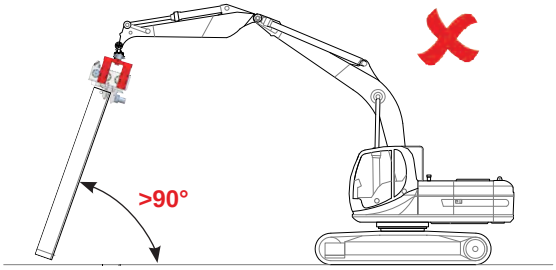

Avoid: Driving / Extraction Position
Avoid any driving / extrating postion that is not vertical. Vibro will become unstable and not easily controlled

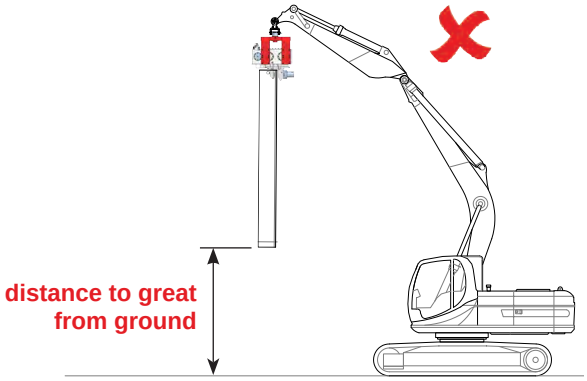

Avoid: Transport Position
When Transporting the pile on the job site do not allow the pile to swing in an uncontolled manner. Damage can occure to the vibro and excavator.

Avoid: Resting/Parting Position
Avoid parking the excavator with the Vibro in a suspended position.

The Excavator Mounted Vibrators have been designed to give years of trouble free service. Providing the equipment is treated with respect and the basic maintenance procedures are adhered to there will be little work additional work required.

The most important points are correct installation on good quality excavators, cleanliness when connecting to the excavator's hydraulic system and regular gearbox oil changes using appropriate oils - again cleanliness is paramount.

Visual inspection of the EMV by a competent person on a daily basis and before being taken into service can prevent many potential problems from occurring. Ensure that lifting accessory test certificates are correct and valid at all times.

- All service and maintenance work must be carried out by qualified personnel using original Dawson parts. The use of other parts will invalidate the whole warranty for the equipment.
- The equipment should be inspected at ground level only and should be positioned so as to be stable at all times.
- Secure the equipment against unexpected starting during the maintenance process.
- The equipment should be inspected by a Dawson technician or by one of their approved distributors once a year or every 1000 working hours.

DAILY MAINTENANCE

a. Grease the two grease points on the EMV300– one on the Saddle Swivel and the other on the side of the Clamp Body. Two or three pumps with a molybdenum-based grease will be adequate.

b. Check machine labelling.

c. Check visible screws, bolts, fittings etc for tightness.

d. Visually inspect all hydraulic hoses and fittings for leaks or damage.

e. Check the gear oil level in the vibrator. The level must be half way up the sight glass.

f. Inspect the lifting chain and chain clamp for damage. The chain should be in good order, free from any structural damage or permanent deformation of any kind. The chain clamp should also be free from any structural damage and its correct operation and safe function should be checked by depressing and releasing several times – any binding or hesitancy with its operation should result in it being changed for a new certified item. The chains Coupler and anchorage point should be in good order showing no signs of damage, wear or cracking.

Remember if in doubt change it – lifting chains in the UK are required to have a thorough examination by a competent person at intervals not exceeding 6 months. Any local/national requirements must be adhered to!

g. Inspect the condition of the Hard Jaws. To be acceptable these should look to be in almost as new condition. The teeth on these pads have some flats on them when new (approximately 1mm). Over time they will round off, flatten out more and even become chipped. If not changed when require they will loose their grip on the pile during driving and certainly during extraction. Besides causing a reduction in performance this can become a safety hazard. We define the following wear limit:

Hard Jaw Wear Limit - 90% of all teeth on any hard jaw should make contactwith the pile and 80% of all teeth should have points with flats no greater than 3mm.

Changing the Hard Jaws – Static Side

Remove the Cap Screw that hold this jaw in place. Tap out the old jaw and clean/inspect the clamp body seating area to ensure the faces are in good order. Slide in the new jaw and check that it is a snug fit – the

jaw should not move up and down. Fit the Cap Screw and tighten using a hexagonal wrench. Remember to install the washers on these screws.

Changing the Hard Jaws – Moving (Cylinder) Side

Release the 8off Cap Screws that hold the Clamp Cylinder in place and remove the Clamp Cylinder. Undo the two clamp supply hoses, carefully marking them to ensure correct re-assembly. Once removed, unscrew the round Hard Jaw counter-clockwise and replace with a new one using a new O-ring. Ensure the Jaw is fully tightened on the Clamp Cylinder piston rod so that the O-ring is no longer visible. Inspect the bronze Guide Bush inside the Clamp Body whilst the cylinder is out – check the grooves in the front area of the bush and the condition of the bore. Replace the bush if badly worn.

Assemble the Clamp Cylinder back into the Clamp Body, fit the clamp hoses then fit and tighten the Cap Screws using the hexagonal wrench. Ensure the clamp functions correctly after completing the work.

h. Inspect the rubber Sandwich Mounts (Elastomers) for wear or damage. Wear is typified by splitting/tares. This usually occurs in the rubber adjacent to the bonded steel plates and is usually a result of fatigue in the material over a long period of time. Crazing/softening may occur but this is usually associated with long term exposure to sunlight or exposure to petroleum based products.
As a general rule change the Sandwich Mount if any single tare or split exceeds 40mm (1½”) or if the rubber has become contaminated.

i. Check the overall condition of the Swivel Assembly. Check that the Lifting Bolt and Nut (that are the centre piece of this assembly) only allow rotational movement with minimal axial movement. Excessive axial movement will allow the assembly to rattle around, make more noise and cause in turn more wear. If the axial play exceeds 1mm it will be necessary to tighten the nut. To do this remove the coil/spring pin with a punch and hammer, tighten the nut further and drill and pin it in the new position.

j. Check the condition of the boom Adaptor Bracket, Shear Pins, Spacers and Bushes. The whole assembly should be relatively tight with minimal play in the components. The bracket needs to be able to float a little from side to side – as much as 5/10 mm is acceptable. The pins and bushes should however be little more than a running fit – clearances of more than 0.5mm would be considered excessive.

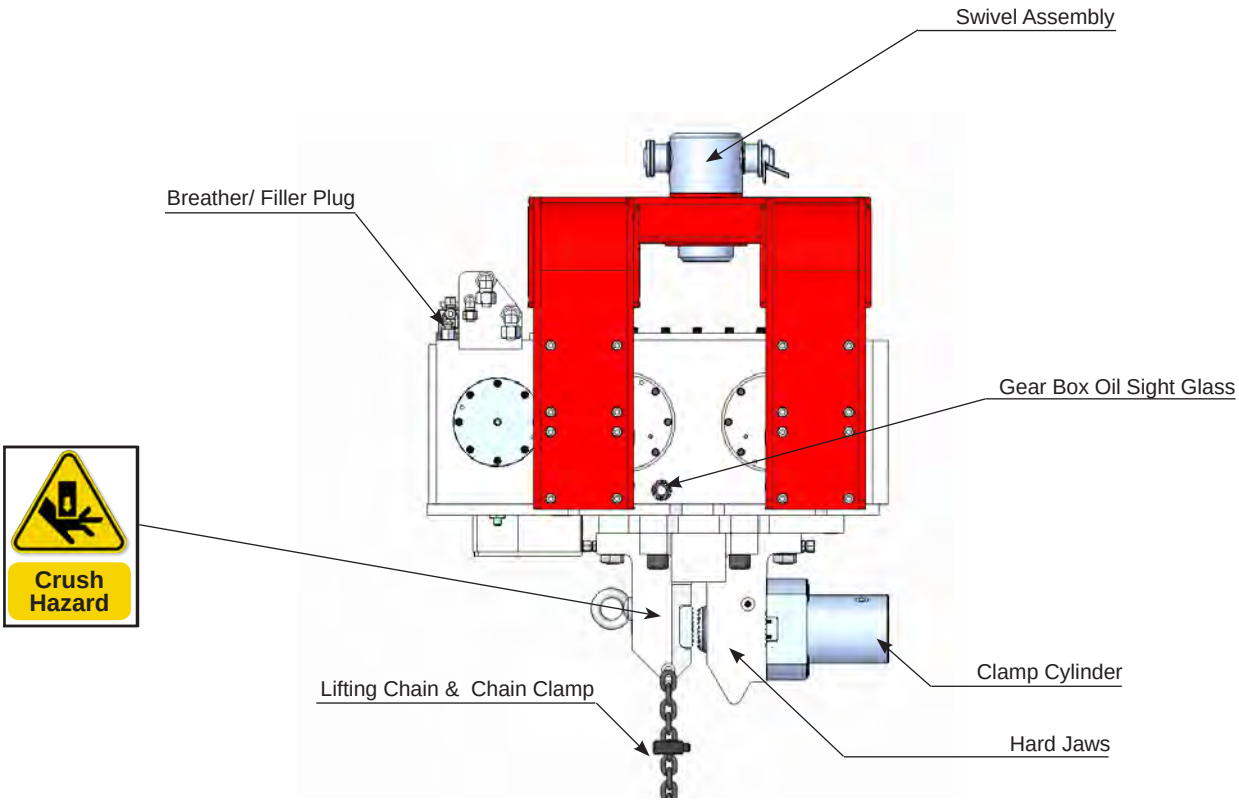
Swivel Assembly
Breather/ Filler Plug
Gear Box Oil Sight Glass
Crush Hazard
Clamp Cylinder
Lifting Chain & Chain Clamp
Hard Jaws

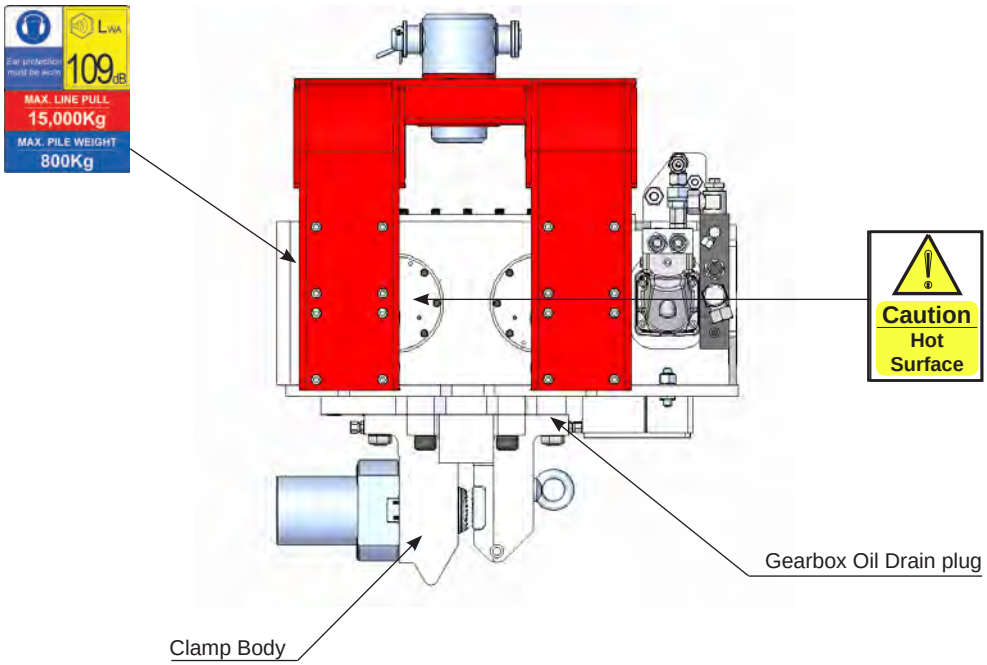
109dB
MAX. LINE PULL
15,000Kg
MAX. PILE WEIGHT
800Kg
Caution
Hot
Surface
Gearbox Oil Drain plug
Clamp Body

EVERY 50 WORKING HOURS

Change the oil in the vibrator gearbox. Remove the Drain Plug from the bottom of the gearbox and the Breather/Filler Plug from the top. Allow the oil to drain out completely into a suitable container – this is best done at the end of a shift when the oil is relatively warm and thin. Replace the Drain plug and fill with new clean oil through the Breather/Filler hole until the oil level in the gearbox is approximately half way up the sight glass – this is approximately 4 litres (1.05 US gallons).

Re-fit the Breather/Filler Plug using a new seal and tighten.

The old oil must be taken to a certified waste disposal centre or handed over to a certified waste disposal contractor.

Generally any good quality mineral based gear oil in the class API GL-5 with viscosity class SAE 75W/90 will be suitable. Alternatively, in hotter climates fully synthetic oil of the same classification may be used. For example:

Manufacturer	Mineral Oil Reference	Synthetic Oil Reference
BP	ENEGEAR HT 75W/90	
MOBIL		MOBILUBE 1 SHC
CASTROL		SAF-EXB
ELF	TRANSELF B 75W/90	TRANSELF TR2 75W/80
TEXACO	GEARTEX EPC80W/90	GEARTEX 5S 75W/90

Note: Maximum ambient operating temperature for the unit +40ºC
Minimum ambient operating temperature for the unit –20ºC

EVERY 100 HOURS

It is recommended that the unit be inspected and serviced by the manufacturer. Apart from undertaking to do the relevant preventative maintenance work and checks as described above Dawson will inspect the structural integrity of the equipment and ensure there are no safety related matters that may go unchecked. Bearings and gears will also be inspected to check for signs of unusual wear or potential problems. In some countries it is a requirement by law that the unit be inspected by qualified personnel.

Please ensure that troubleshooting, inspection work and repairs are undertaken by suitably qualified personnel. Training can be carried out by the manufacturer or by your local approved Dawson distributor. The following guidelines are intended to assist with basic diagnostics and are not intended to be a definitive list – it assumes the inspector has a basic understanding of servicing techniques associated with this type of equipment. Work should not be undertaken by a novice without adequate supervision.

EMV CLAMP DOES NOT CLOSE

Check that base machine hydraulics lines are correctly connected. Operate control lever in both directions to check flow directions.

Remove the check valve cartridge from the rear of the clamp cylinder and inspect for contamination or damage. The poppet inside the cartridge should move freely. If in doubt replace and use new seals.

Independently check the operation of the clamp cylinder with it removed from the hydraulic circuit. This should only be carried out by a competent person.

Remove the cylinder and inspect for mechanical damage inside the clamp or inside the cylinder.

EMV CLAMP CLOSES BUT THE UNIT WILL NOT VIBRATE

Check the base machine operating pressure and flow rate. If the pressure output of the excavator is too low the EMV will not run at all. This is because the sequence valve pressure setting has to be overcome before oil can pass to the drive motor.

Check the sequence valve setting by installing a pressure test gauge in the clamp close line and monitoring the pressure at which the valve opens. Ensure this is set to 165 bar.

Damaged sequence valve – remove and inspect but replace if in doubt using new seals.

Motor failure or gearbox problem. Try connecting the two main oil supply lines directly to the hydraulic motor ports and running the unit with low engine speed – effectively low oil flow rate. Caution - it will be easy to over-speed the motor in this case because the flow regulator is now out of the circuit.

If the unit does not vibrate either the motor has become damaged or there is a fault with the gearbox. Check the oil level in the gearbox to see that it has not become filled with hydraulic oil from the motor shaft seal – in this case the unit usually runs very slowly unless metal fragments have become entrapped in the transmission system as result. Consult the manufacturer.

Remove the motor from the gearbox and test.

As a last resort take the saddle assembly off the EMV and remove the gearbox lid for an internal inspection. The gears, shafts and bearings should rotate freely.

Caution - pay attention to trapping body parts in the mechanism during inspection!

UNIT WILL NOT RUN AT THE CORRECT SPEED - “JUMPS AROUND” OR SPEED FLUCTUATES

Check that the base machine hydraulic output complies with the minimum specified for the unit. Specifically check with the excavator supplier/manufacturer what system pressure is available on the bucket ram circuit at 130 l/min.

Check the setting of the flow regulator to ensure adequate flow is reaching the drive motor.

Check the sequence valve pressure setting. If this setting is too close to the operating pressure the EMV will speed up then slow down, speed up then slow down etc.

Check the gearbox oil level. If it is much higher than the sight glass the motor shaft seal has probably blown.

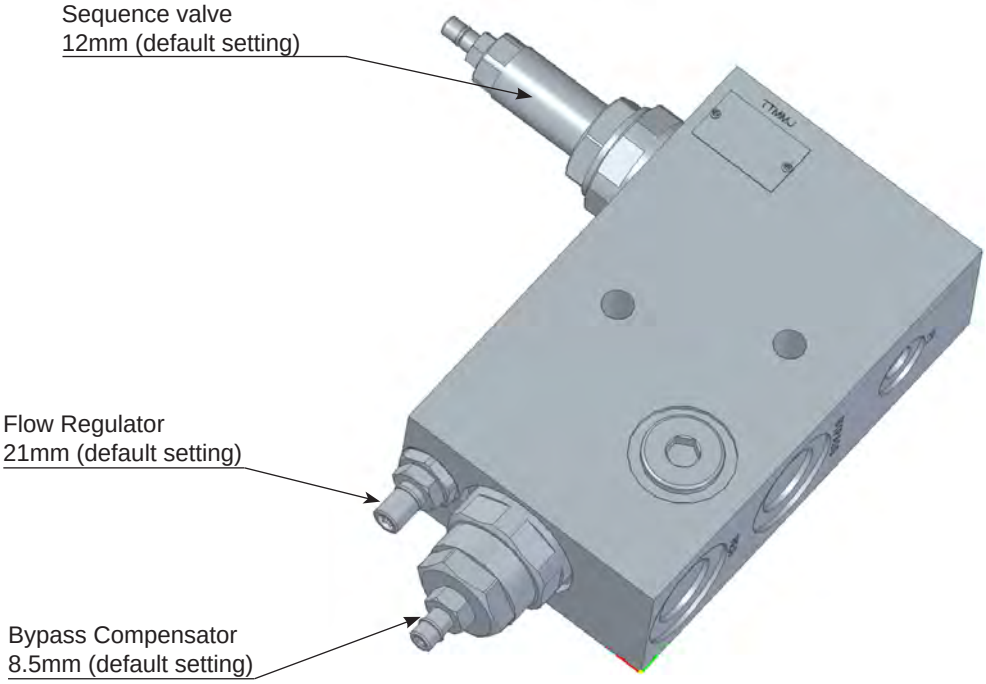

OIL BLOWING OUT OF THE MOTOR BLOW-OFF VALVE

Drain line restricted or blocked – stop work immediately.

Check the drain line hose for obvious restrictions at fittings, filters etc.

Check the drain hose for damage – look carefully as the bore of the hose can be crushed even when the outside of the hose looks to be in good order at a casual glance.

Check the drain hose point of entry into the base machine hydraulic oil system – it is always best to run it directly to tank.

Do not work with quick disconnects as they can cause restriction

Drain line being pressurised – check that the line is not connected to a supply line e.g. the pressure line from a breaker circuit.

Long drain hose or the hose bore too small – either of these can contribute to an increase in back pressure.

Extremely cold weather – if the base machine hydraulic oil is of an inappropriate viscosity grade for the ambient temperature it may well be too thick. This will cause an increase in back pressure in the drain hose.

Faulty Blow-Off Valve on the motor casing – check that this has a minimum crack pressure of 6 bar and a maximum of 7 bar. Replace if unsure using a new calibrated valve and a new sealing ring.

Leaking seals on the sequence valve cartridge leading to excessive drain line flow rate – remove the drain line from the EMV and measure leakage flow rate. Leakage in excess of 5 l/min (1.33gpm) indicates either a seal kit problem with the sequence valve or high internal motor leakage. Split the sequence valve drain line and motor case drain line and measure leakage rates independently – the sequence drain line should have little or know leakage.

OIL BLOWING OUT OF THE GEARBOX BREATHER VALVE & THE GEAR BOX IS FULL OF OIL

The drive motor case seal has been blown, typically because the drain line pressure has been exceeded.

The unit will need to be removed from the job site and repaired in a suitably equipped workshop. The oil in the box will be a mixture of hydraulic and gear oils.

Once in the workshop drain the oil from the gearbox and inspect the oil for signs of debris. If only the seal has blown out without any damage to the motor casting then it may be possible to repair the motor with an authorised Parker Hydraulics (VOAC) distributor, change the gear oil and rebuild the unit.

If however, the motor casting has also been damaged in the area of the seal housing it will be necessary to completely inspect the inside of the gearbox. Remove the gearbox lid and inspect the gear teeth and inspect all bearings. Check the gears for any signs of damage. Remove all bearing covers from the gearbox sides and inspect the outer races for signs of grooves or any other contamination or damage – look at the rollers in each bearing. The bearings and all running faces should be in perfect condition, if not they will need to be replaced. Consult with the manufacturer at this stage or one of their approved distributors – it is strongly recommended that the unit be repaired by the manufacturer in order to ensure correct procedures and materials are used for an effective repair.

CLAMP CLOSES ITSELF IMMEDIATELY AFTER BEING OPENED

This fault can only occur on older units prior to serial number 45-083 without the reverse flow check valve fitted to the return motor port. It occurs when the D reg check valve on the flow regulator becomes jammed shut. When opening the clamp the drive motor can then rotate slowly. Once the control lever is released the motor effectively becomes a pump, driven by the inertia of the eccentric weights in the gearbox. Consequently the clamp can be driven closed again. Should this problem occur Dawson could supply a reverse flow check valve as a fix.
Check the condition of the Hard Jaws – see section (61.f).

CLAMP LOOSES GRIP ON THE PILE

The clamp can also loose grip on the pile when clamped, with the vibrator not vibrating, if the check valve on the rear of the clamp cylinder has faulty/leaking seals or it the clamp cylinder piston seals are damaged/ worn.

Alternatively there may be insufficient system operating pressure if the sequence valve setting has been adjusted down in order to attempt running on an unsuitable excavator. Check the system operating pressure and excavator specifications.

JIC

Fittings:	QTY	Part No.
1 1/16” JIC Bulkhead elbow + nut	2 off	4223A
1 1/16” JIC Blanking cap	2 off	4233A
1 1/16” JIC to 1” BSP M/M adapter	1 off	
1” Dowty washer	1 off	
1 1/16” JIC/BSP positional Tee	1 off	4229A
9/16” JIC M to 1/16” JIC F reducing adapter + nut	1 off	4228A
3/4” BSP M/M Adaptor	1 off	
3/4” Dowty washer	3 off	
3/4” BSP 1 1/16” JIC MM adapter	1 off	4214A
RV16 Non return valve	1 off	4225A
22 x 1.5mm to 3/4” JIC adapter	1 off	
22mm Dowty washer	1 off	
7/8” JIC Bulkhead elbow + nut	1 off	4224A.1
7/8” BSP Blanking cap	1 off	4234A.1
3/8” BSP to 9/16” JIC M/M adapter	6 off	4217A
3/8” Dowty washer	6 off	
3/4” JIC Run Tee	1 off	
3/8” BSP to 3/4” JIC M/M adapter	1 off	
1” BSP to 1 5/16” JIC positional elbow	2 off	4212A
3/8” BSP to 9/16” JIC positional elbow	1 off	4216A

Hose:		
3/4” 4SP 1 1/16” JIC Straight to 1 5/16” JIC straight 360mm C to C + SG	1off	4221A.1
3/4” 4SP 1 1/16” JIC straight both ends 200mm overall length	1 off	4222A.1
3/4” 4SP 1 1/16” BSP swept 90° both end 90° 0° AOR 1000mm C to C + SG	1 off	4206A
3/4” 4SP 1 1/16” JIC straight to swept 90° 0° AOR 1100mm C to C + SG	1 off	4205A
1/2” 4SP 3/4” JIC straight to 3/4” JIC 45° swept 260mm C to C	1 off	4207A.1
1/2” 4SP 7/8” JIC straight to 3/4” JIC 90° swept 280mm C to C + SG	1 off	4220A.1
3/8” EP08 9/16” JIC straight to 9/16” JIC swept 45° 900 mm C to C	1 off	4208.2A
3/8” EP08 9/16” JIC straight both ends 700mm C to C	1 off	
1/4” EP04 9/16” JIC Straight to 9/16” JIC swept 90° 180mm C to C	1 off	4281A
1/4” EP04 9/16” BSP Straight to 9/16” JIC swept 90° 150mm C to C	1 off	4280A

BSP

Fittings:	QTY	Part No.
3/4” BSP Bulkhead fitting + nut	2 off	
3/4” BSP M/F Compact elbow	2 off	
3/4” BSP Blanking cap	2 off	
3/4” BSP to 1” BSP M/M Adaptor	2 off	
1” Dowty washer	2 off	
3/4” BSP Branch Tee	1 off	
3/8” BSP M to 3/4”BSP F Adaptor	1 off	
3/4” BSP M/M Adaptor	5 off	
3/4” Dowty washer	6 off	
RV16 Non return valve	1 off	
1” BSP to 3/4” BSP M/F fixed reducer	1 off	
22 x 1.5mm to 1/2” BSP adaptor	1 off	
22mm Dowty washer	1 off	
1/2” BSP Bulkhead fitting + nut	1 off	
1/2” BSP M/F Compact elbow	1 off	
1/2” BSP Blanking cap	1 off	
3/8” BSP M/M adaptor	4 off	
3/8” Dowty washer	10 off	
3/8” BSP Run Tee	1 off	
1/4” BSP to 3/8” BSP M/M Adaptor	5 off	
1/4” BSP Run Tee	1 off	

Hose:		
3/4” 4SP 3/4” BSP Straight F to 3/4” BSP Compact 90° F 370mm Cut hose	1off	29016
3/4” 4SP 3/4” BSP straight F both ends 135mm Cut hose	1 off	29017
3/4” R9R12 3/4” BSP swept 90° to 3/4” BSP compact 90° 0° AOR 915mm Cut hose + SG	2 off	29018
1/2” 4SP 1/2” BSP straight F to 3/8” BSP 45° swept F 260mm C to C	1 off	29019
1/2” 4SP 1/2” BSP straight F to 3/8” BSP 90° swept F 280mm C to C + SG	1 off	29020
3/8” EP08 3/8” BSP straight F to 3/8” BSP swept 45 F 900 mm C to C	1 off	4208.2B
3/8” EP08 3/8” BSP straight F to 3/8” BSP compact 90 F 700mm C to C	1 off	
1/4” EP04 1/42 BSP Straight F to 1/4” BSP swept 90° F 132mm Cut hose	1 off	29028
1/4” EP04 1/42 BSP Straight F to 1/4” BSP swept 90° F 105mm Cut hose	1 off	29030
1/4” EP04 1/4” BSP Compact 90° F both ends 220mm Cut hose	1 off	29032

parts lists for the emv300

Ref.	Qnt.	Revision	Date	Intro.	Appr. by

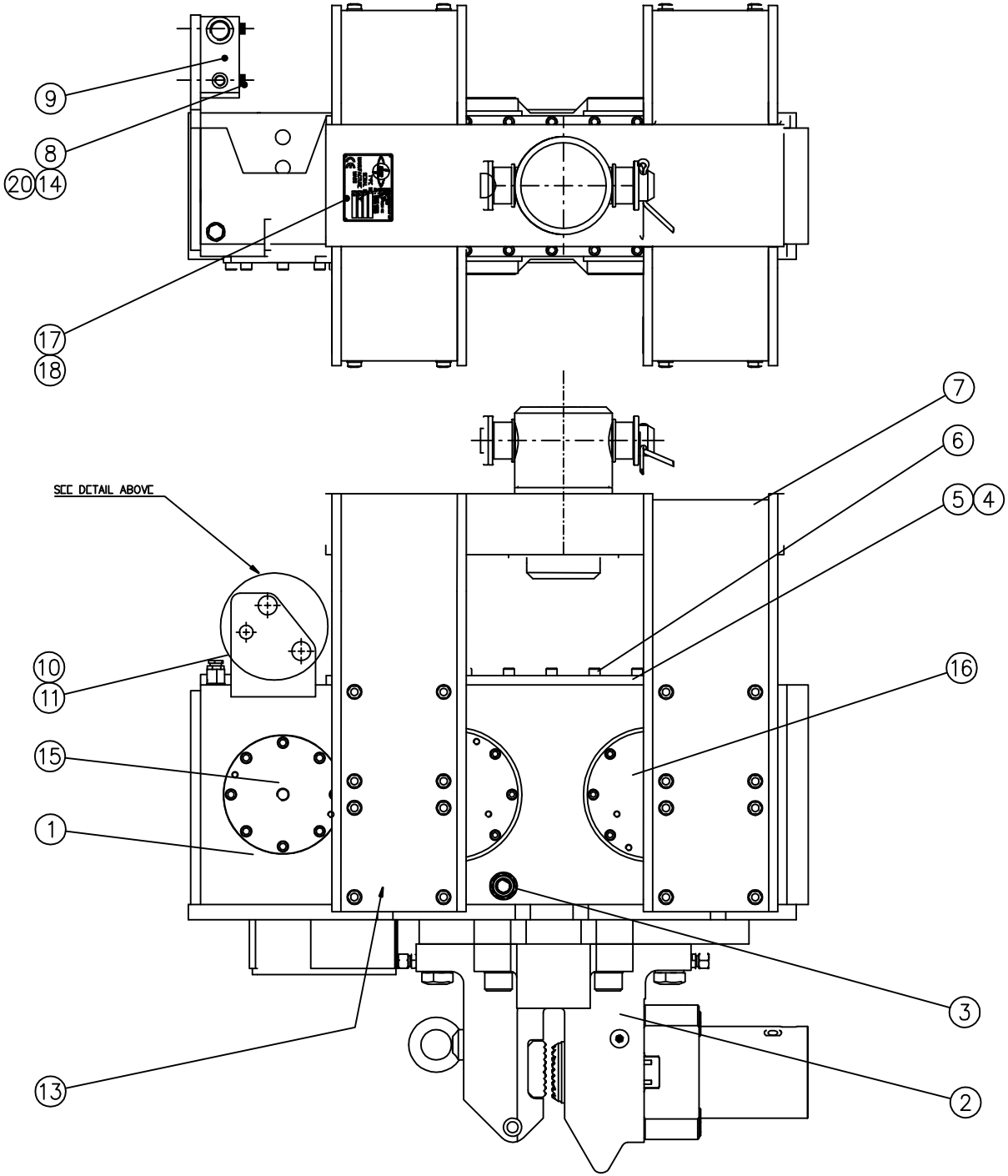

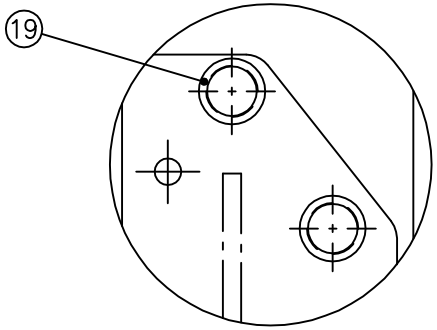

ENLARGED BULKHEAD DETAIL

SHOWING BUSHES FOR JIC HOSE FITTINGS APPLICATION

NOTES :

THIS DRAWING MUST NOT BE REPRODUCED BY ANY MEANS WITHOUT PRIOR PERMISSION OF THE COPYRIGHT OWNER

Ref.no.	Qnt.	Part name	Material	Dimension	Part number
20	2	SPRING PIN		ø8 X 30	OM08-030-22
19	2	HEADED BUSH			4003.3
18	4	ELECTRO-BRASSED SCREW	TYPE U	No6 x 1/2"	1-204-00-01
17	1	IDENTIFICATION PLATE	CE TYPE		1-203-00-02
16	1	DRIVEN GEAR ASSEMBLY			4001
15	1	DRIVE GEAR ASSEMBLY			4040A
14	2	WASHER		M12	012
13	1	DRAIN PLUG		VS-R1 WD	1-064-00-01
12	-	-		-	-
11	1	BREATHER/FILLER PLUG		SIV 10K	4043
10	1	DOWTY WASHER		M22	4043D
9	1	FLOW REG.& SEQ.VALVE	INT' HYD'	CXP 13163	4080-11
8	2	SOCKET HEAD CAP SCREW	12.9	M12 x 80	OM12-080-02
7	1	SADDLE ASSEMBLY			4020A2
6	26	SOCKET HEAD CAP SCREW	12.9	M10 x 35	OM10-035-02
5	1	CASING LID			4004
4	1	GASKET			4019
3	1	OIL LEVEL SIGHT GLASS			4039
2	1	JAW ASSEMBLY			4018-3T
1	1	CASING			4002-2

Design by	Drawn at	Copied	Checked	Standard	Affirmed	Scale	Replace	Replaced by
M.D.B				A3		1 : 5		

DAWSON CONSTRUCTION PLANT LTD.

EMV 300A ASSEMBLY

File name: emv 300 | Date: 02-08-10

Drawing no. 4000A2

Rf.nr	Qnt.	Revision	Date	Intro.	Appr.by
A		BLOW-OFF NOW ON ELBOW	28-10-99		ML

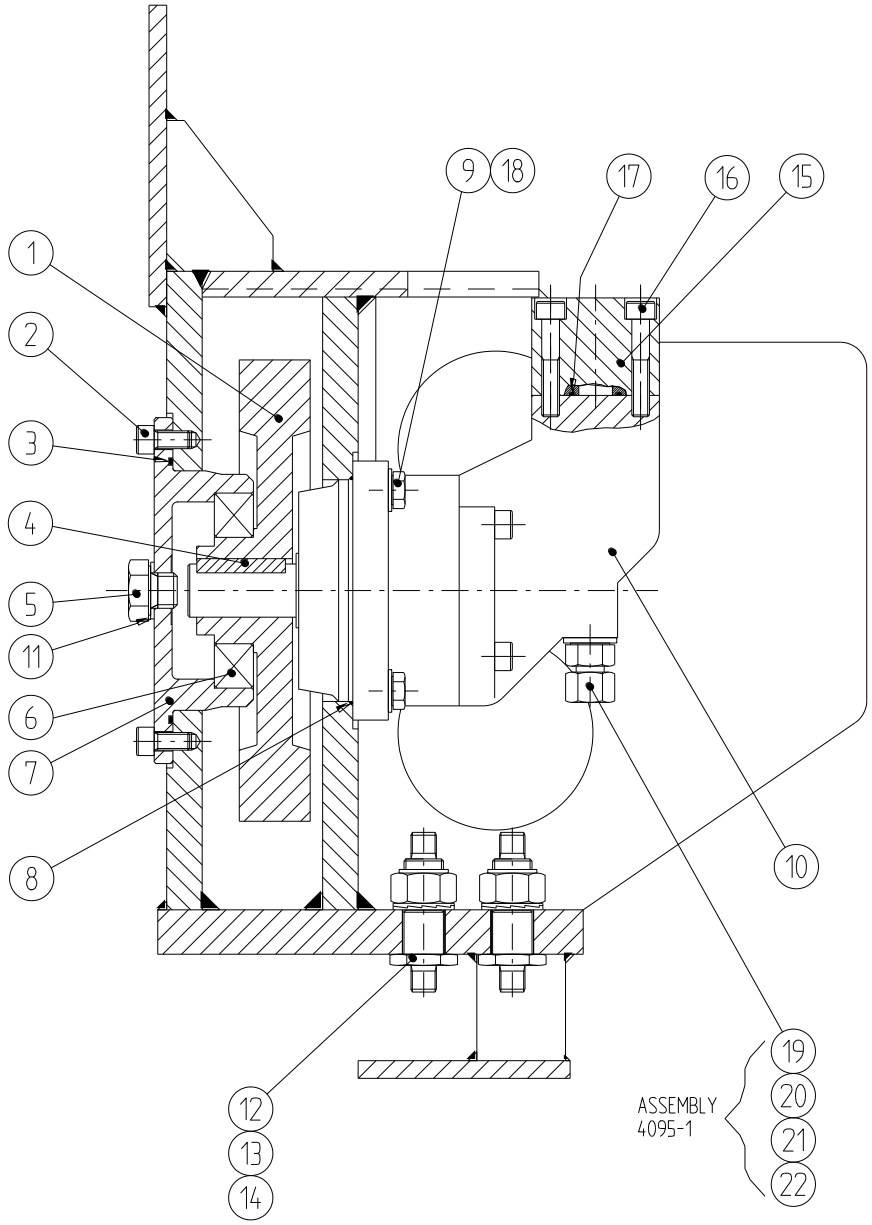

NOTES :

THIS DRAWING MUST NOT BE REPRODUCED BY ANY MEANS WITHOUT PRIOR PERMISSION OF THE COPYRIGHT OWNER

Ref.no.	Qnt.	Part name	Material	Dimension	Part Number
22	1	ELBOW SWIVEL		EVW12S	1-112-10-01
21	1	STUD STANDPIPE		EGESD12...	4230
20	1	BLIND GROMMET	RUBBER	13mm	4096
19	1	"BLOW-OFF" CHECK VALVE	6 bar		4231
18	4	WASHER		M12	012
17	2	'O' RING 204-025-4470			4079
16	6	SOCKET HEAD CAP SCREW	12.9	M10 X 55	4078
15	1	MANIFOLD BLOCK			4071
14	2	NYLOC NUT (ANSIB)	GRADE 2	7/8"-14 UNF	4110
13	2	ANTI-VIBRATION WASHER	NORD-LOCK	M22	4109
12	2	BULKHEAD CONNECTOR		9/16" JIC	4256a
11	1	WASHER	COPPER	M20 x 2	4038
10	1	HYDRAULIC MOTOR	VOLVO	F12-40-MF-1H-K	4075
9	4	HEXAGON HEADED SCREW	8.8	M12 x 35	4084
8	1	'O' RING 206-223-4470			4076
7	1	DRIVESHAFT END CAP			4006
6	1	BEARING 6212-2RS1			4035
5	1	HEXAGON HEADED BOLT	8.8	M20 x 15	4061-1
4	1	KEY	KEYSTEEL	8 X 7 X 50	4077
3	1	'O' RING 206-444-4470			4033
2	8	SOCKET HEAD CAP SCREW	12.9	M10 x 20	4062
1	1	DRIVE GEAR			4010-1

Design by	Drawn at	Copied	Checked	Standard	Affirmed	Scale	Replace	Replaced by
MLEE				A3		1 : 2.5		

DAWSON CONSTRUCTION PLANT LTD.

DRIVE GEAR ASSEMBLY FOR EMV 30C

File name | Date 07-11-96

Drawing no. 4040a

Rf.nr	Qnt.	Revision	Date	Intro.	Appr.by

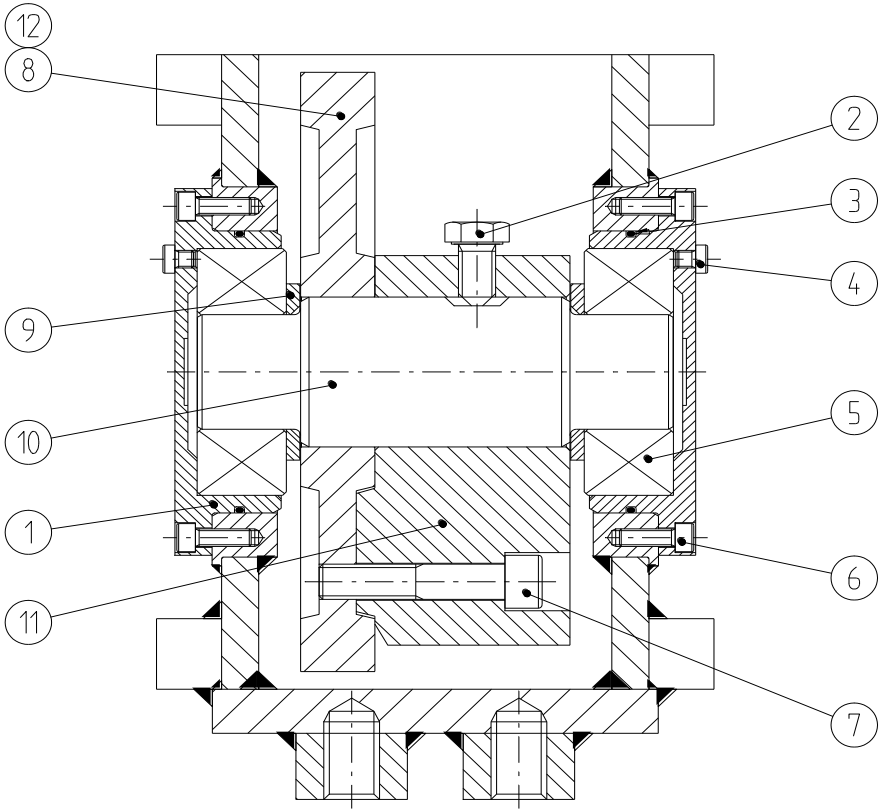

NOTES :

-THIS DRAWING MUST NOT BE REPRODUCED BY ANY MEANS WITHOUT PRIOR PERMISSION OF THE COPYRIGHT OWNER

Ref.no.	Qnt.	Part name	Material	Dimension	Remark
12	1	DRIVEN GEAR B			4009 B
11	2	ECCENTRIC WEIGHT			4008
10	2	MAINSHAFT			4007
9	4	THRUST WASHER			4011
8	1	DRIVEN GEAR A			4009 A
7	6	SOCKET HEAD CAP SCREW	12.9	M20 x 100	1-068-00-01
6	32	SOCKET HEAD CAP SCREW	12.9	M10 x 30	1-018-11-01
5	4	BEARING NJ 2313 EC			4032
4	12	SKT LOW HEAD CAP SCREW	12.9	M10 x 10	4031 (MOD FROM 16 LONG)
3	4	'O'RING 204-250-4470			4030
2	2	HEX' HEAD BOLT (SPECIAL)			4029
1	4	MAINSHAFT ENDCAP			4005

Design by	Drawn at	Copied	Checked	Standard	Affirmed	Scale	Replace	Replaced by
A.J.R.				A3		1 : 2.5		

DAWSON CONSTRUCTION PLANT LTD.

DRIVEN GEAR ASSEMBLY - EMV30C

File name	Date
	10-12-92

Drawing no. 4001

Rf.nr	Qnt.	Revision	Date	Intro.	Appr.by
D		CHECKING GAP NOTE ADDED	26/1/13	Intro.	PLW

3RD ANGLE

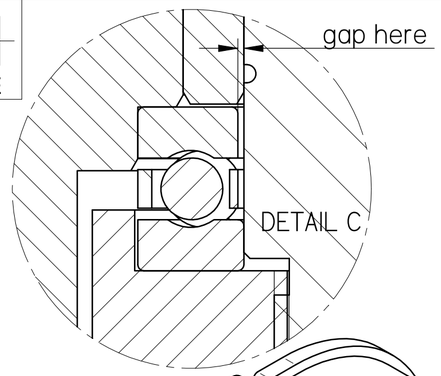

maximum gap allowed due to wear, check using a crowbar to force apart assembly, then insert a feeler gauge at least 20mm into gap if more than 1mm change lifting bolt and nut immediately and check other components replacing as required.

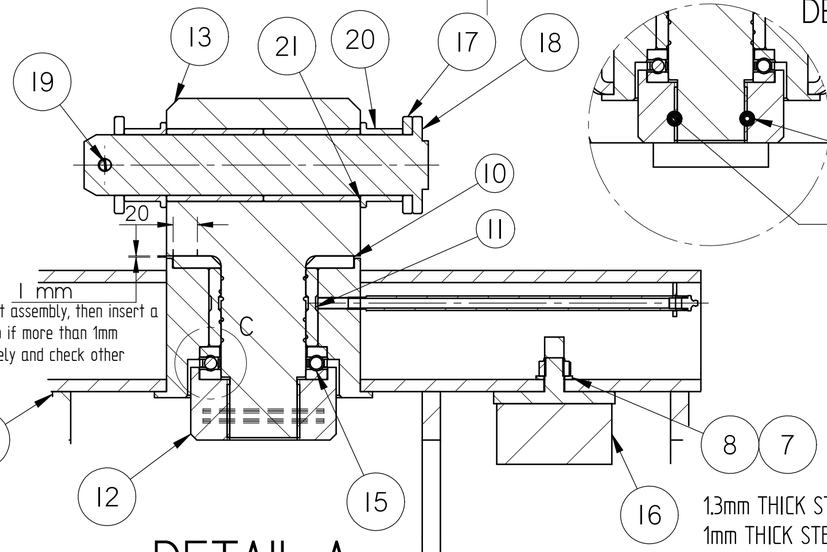

DETAIL A

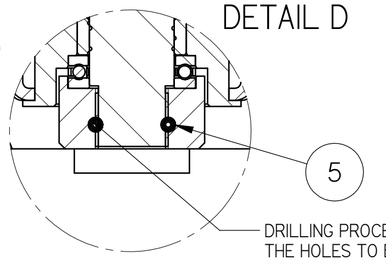

DRILLING PROCEDURE TO FIT PAIRS OF COIL PINS REQUIRES THE HOLES TO BE SLIGHTLY BIGGER THAN PREVIOUS SINGLE CENTRAL COIL PIN DESIGN OTHERWISE TOO DIFFICULT TO INSTALL HEAVY DUTY COIL PINS. TIGHTEN NUT FULLY SO THAT LIFTING BOLT CAN ONLY BE TURNED BY HAND USING 2 FOOT LONG BAR. PREVENT BOLT FROM TURNING, USING THE Ø 11.5 PRE-DRILLED PILOT HOLE ON THE SIDE THAT WILL TIGHTEN THE NUT DRILL THROUGH NUT, BOLT AND OTHER SIDE OF NUT TO Ø 12.2/ 12.3 CHAMFER LEAD OF HOLE, LUBRICATE AND FIT FIRST COIL PIN THEN REPEAT DRILLING FOR SECOND HOLE AND FITTING OF SECOND COIL PIN.

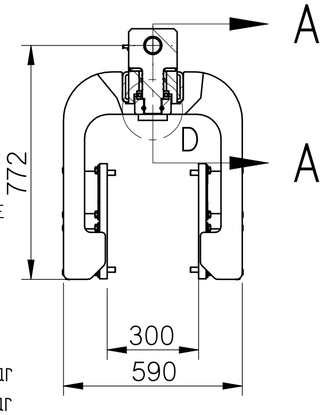

1.3mm THICK STEEL HEAVY DUTY COIL PIN TYPE 8748 = 120kN Double Shear
1mm THICK STEEL NORMAL DUTY COIL PIN TYPE 8750 = 89kN Double Shear

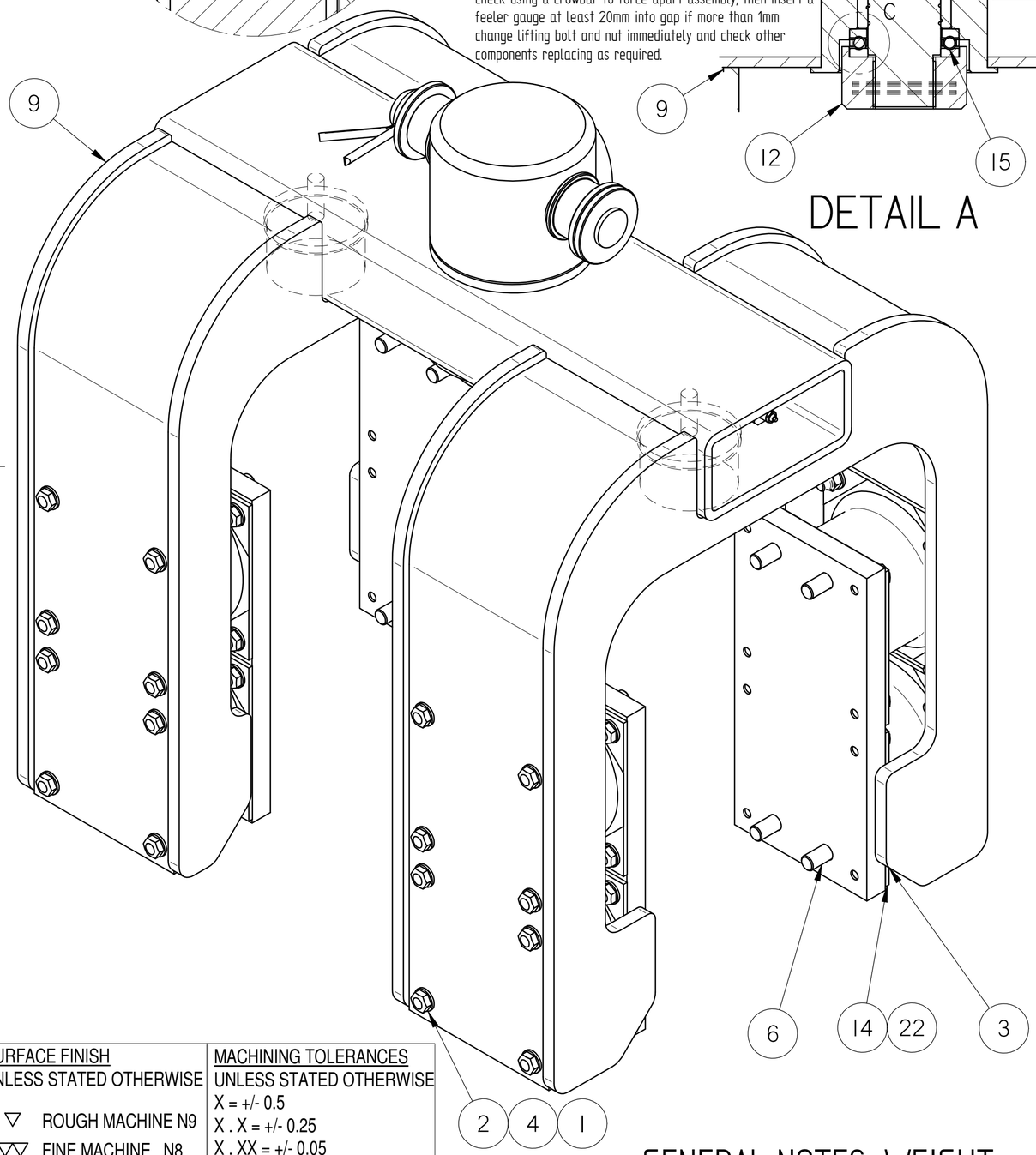

Ref.no.	Qnt.	Part name	Material	Dimension	Remark
22	4	SANDWICH MOUNT ADAPTOR			4104
21	2	SLEEVE			4069
20	2	FLANGED BUSH			4068
19	1	SPLIT PIN			4067
18	1	SHEAR PIN			4066
17	2	SPACER			4065
16	2	BUFFER			4028
15	1	BEARING	51214		4026
14	8	SANDWICH MOUNTING			4025A
13	1	LIFTING BOLT			4024 issue C
12	1	NUT			4023 issue D
11	1	BUSH	bronze	Z4022	4022
10	1	THRUST WASHER			4021
9	1	EMV300 USA SADDLE			4017-A2
8	2	WASHER		M16	0M16.000.20
7	2	NYLOC NUT - TYPE T		M16	0M16.000.12
6	16	SOCKET HEAD CAP SCREW		M16 x 35 LG	0M16-035-02
5	2	Coiled Spring Pin			0M12.100.36
4	32	HEX HD BOLT		M12 x 40LG	0M12.040.01
3	32	HEX HD BOLT	ST.STEEL	M12 x 30LG	0M12.030.01
2	96	WASHER	ST.STEEL	M12	0M12.000.20
1	32	NYLOC NUT - TYPE T		M12	0M12-000-12

SURFACE FINISH
UNLESS STATED OTHERWISE
▽ ROUGH MACHINE N9
▽▽ FINE MACHINE N8
▽▽▽ GRIND N6

MACHINING TOLERANCES
UNLESS STATED OTHERWISE
X = +/- 0.5
X . X = +/- 0.25
X . XX = +/- 0.05
ANGLES +/- 0.5°
DIMENSIONS IN MILLIMETERS

GENERAL NOTES. WEIGHT - 281Kg

Design by	Drawn by	Copied	Checked	Standard	Affirmed	Scale	Replace	Replaced by
peter watt	peter watt	-	-	A3	-	-	-	-

DAWSON CONSTRUCTION PLANT LTD.

SADDLE ASSEMBLY
EMV 300 USA

Sheet 1 of 1
Date 28/01/2013
Drawing no. 4020-A2 issue C

Ref.no	Qnt	Revision	Date	Intro.	Appr by

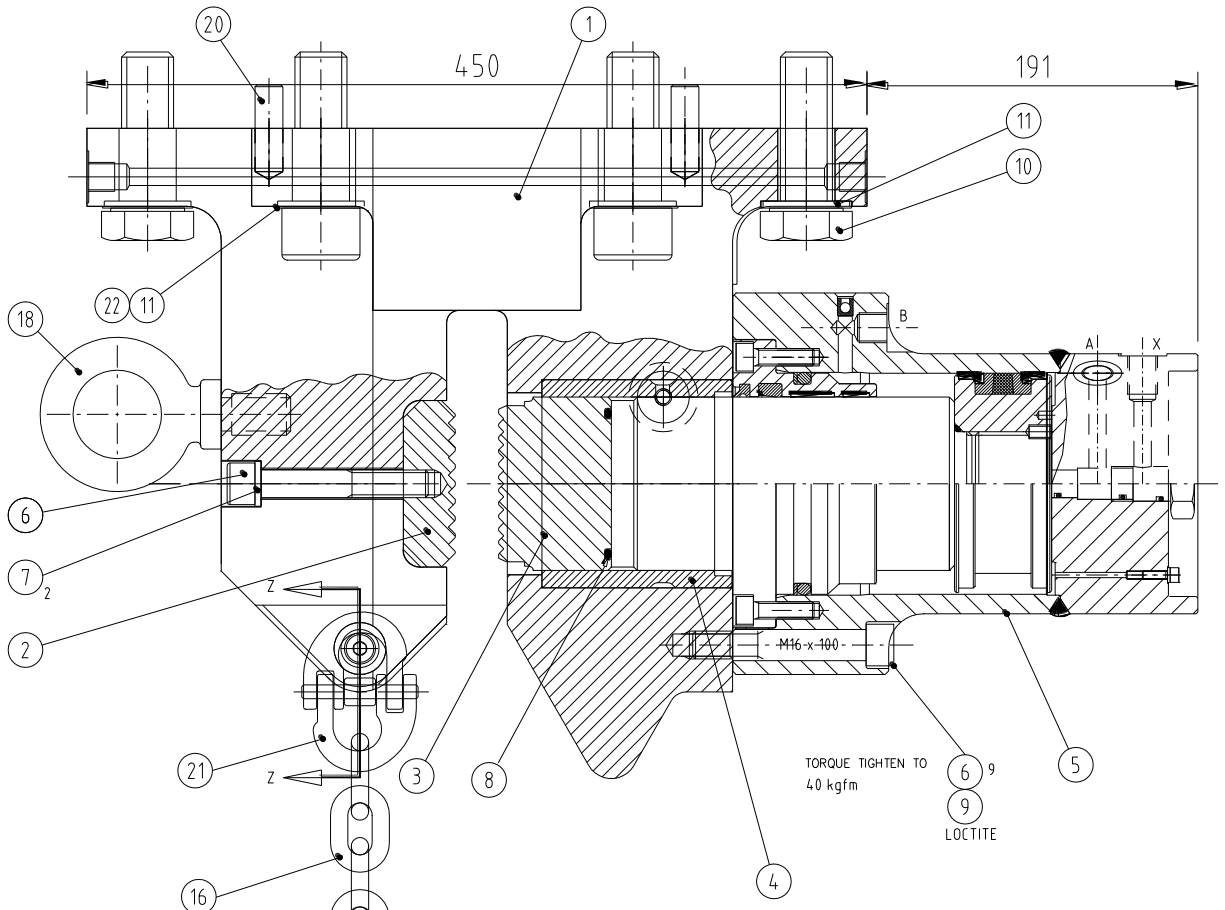

Ref.no.	Qnt	Part name	Material	Dimension	Part number
22	4	SOCKET HEAD CAP SCREW		M30x90	OM30-090-02
21	1	CHAIN COUPLER		G 10-8	TLR 362
20	2	DOWEL		Ø16 x 50	4073
19	1	CHAIN CLAMP		10mm	TLR 360
18	1	EYE BOLT		M24	1-150-18-01
17	1	GREASE NIPPLE		1/8" BSP	1-057-00-01
16	1	LIFTING CHAIN Ø10		27 LINKS	TLR 361
15	2	WASHER	8.8	M10	OM10.000.26
14	1	NYLOC NUT		M10	OM10.000.11
13	1	SLEEVE		Ø18x100	TLR 368
12	1	SOCKET HEAD CAP SCREW	12.9	M10 X 135	OM10-135-02
11	8	NORDLOK WASHER	8.8	M30	OM30-000-22
10	4	HEX. HEAD BOLT	8.8	M30x90	OM30-090-01
9	A/R	LOCTITE 222			
8	1	'O' RING 208-825-4470			4094
7	2	SPRING WASHER	8.8	M16	OM16.000.21
6	11	SOCKET HEAD CAP SCREW	12.9	M16 X 100	OM16.100.02
5	1	CLAMP CYLINDER			4116
4	1	BUSH			4015
3	1	MOVING JAW			4014-1
2	1	STATIC JAW			4013
1	1	CLAMP BODY (THICK BASE)			4012-3T

Design by	Drawn at	Copied	Checked	Standard	Affirmed	Scale	Replace	Replaced by
PLW				A2		1 : 2		

DAWSON CONSTRUCTION PLANT LTD.

CLAMP ASSEMBLY

File name | Date 26-06-06

Drawing no. 4018-3T

NOTES :

THIS DRAWING MUST NOT BE REPRODUCED BY ANY MEANS WITHOUT PRIOR PERMISSION OF THE COPYRIGHT OWNER

WHEN FITTED TO AN EMV 70 ITEM 10 IS ONLY 75mm LONG.

0M10.075.01 (4057)

Rf.nr	Qnt	Revision	Date	Intro.	Appr.by
A	1	CARTRIDGE WAS CKCB-XCN	24-03-04	DAB	

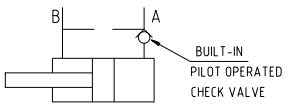

SCHEMATIC DIAGRAM

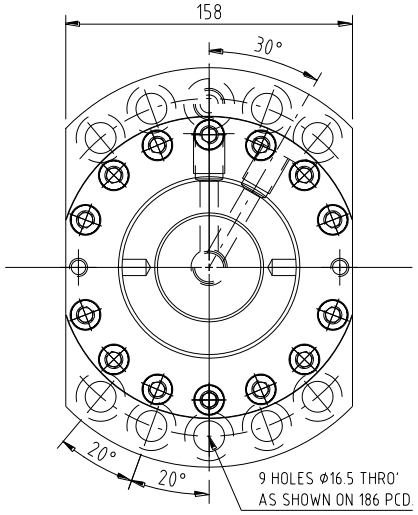

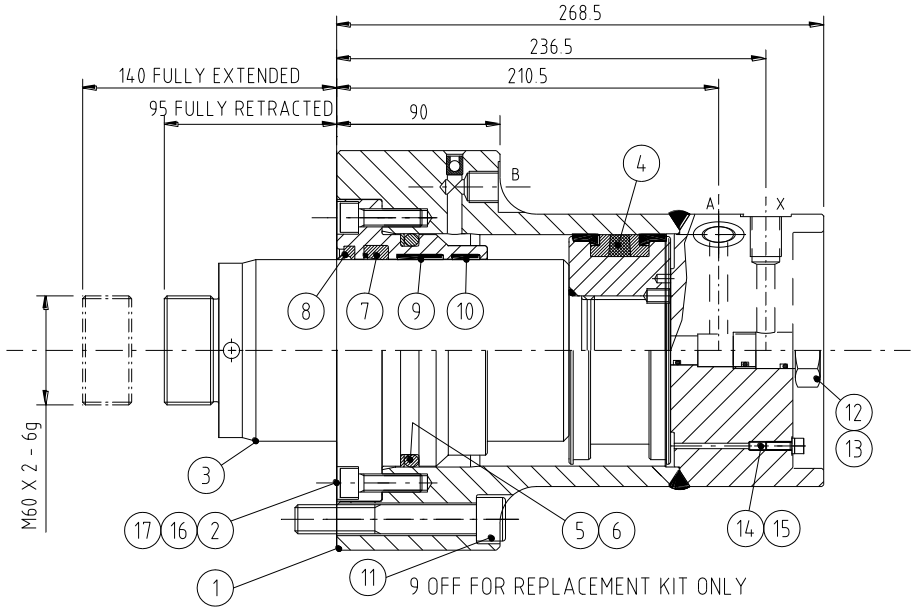

FOR REPLACEMENT KITS:			
	4116.R (METRIC)		4116.R A (JIC)
1	4116. CYL ASSY	1	4116. CYL ASSY
1	4116.5 PIPE KIT	1	4116.5 A PIPE KIT
9	0M16.100.02	9	0M16.100.02

SERVICE SEAL
KIT $
4116-1

	Ref.no.	Qnt.	Part name	Material	Dimension	Remark
	17	A/R	LOCTITE 242			
	16	12	SKT HEAD CAP SCREW	12.9	M10 X 35	0M10.035.02
$	15	1	M5 BONDED SEAL			0M05.000.40
	14	1	M5 X 16 SHCS	12.9		1-050-21-01
	13	1	SUN CARTRIDGE SEAL KIT			4016-3
A	12	1	SUN CARTRIDGE COMPLETE	CKCD-XCN		4016-2
	11	9	SKT HEAD CAP SCREW	12.9	M16 X 100	0M16.100.02
$	10	1	WEAR STRIP	GR73.100.15	15 WIDE	4116-24
$	9	1	WEAR STRIP	GR73.100.25	25 WIDE	4116-23
$	8	1	ROD WIPER	CSWM 100		4016-15
$	7	1	ROD SEAL (DLI)	MD100113.13E		4016-16
$	6	1	BACKUP RING	BKM 425	SPIRAL	4116-22
$	5	1	'O' RING	BS 425		4016-17
$	4	1	PISTON SEAL	SPS 500400		4016-18
	3	1	PISTON AND ROD ASSY			4116-6
	2	1	GLAND			4116-10
	1	1	CYLINDER HOUSING ASSY			4116-11

NOTES:

CYLINDER BORE = 127.0mm (5.0")
STROKE = 45mm
NORMAL PRESSURE = 250 BAR
MAX TEST PRESSURE = 350 BAR

TIGHTENING TORQUES:
M5 SHCS 8.5 NM
M10 SHCS 80 NM
SUN VALVE 45/50 NM

HYD PIPE &
FITTINGS KIT
4116.5 METRIC
4116.5A JIC.

EST WT.:42 KG

Design by	Drawn by	Copied	Checked	Standard	Affirmed	Scale	Replace	Replaced by
	WJW			A3		1:2.5		

DAWSON CONSTRUCTION PLANT LTD.

ASSEMBLY CLAMP CYLINDER
EMV 300 AND VARIANTS

File 4116.dwg
Date 28/4/99
Drawing no. 4116.dwg (INC R, RA)

Rf.nr	Qnt.	Revision	Date	Intro.	Appr.by

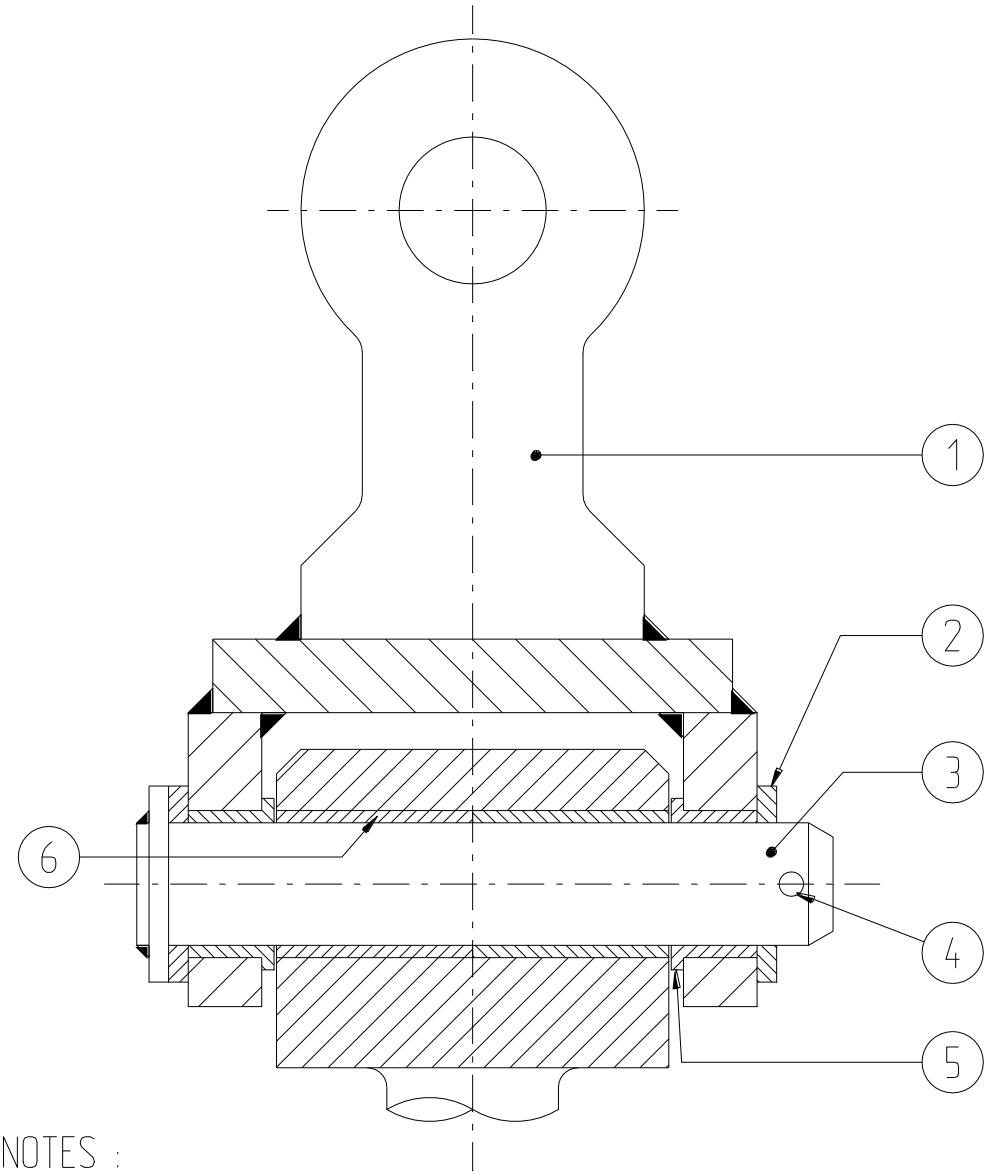

NOTES :

-THIS DRAWING MUST NOT BE REPRODUCED BY ANY MEANS WITHOUT PRIOR PERMISSION OF THE COPYRIGHT OWNER

Ref.no.	Qnt.	Part name	Material	Dimension	Remark
6	2	SLEEVE			4069
5	2	FLANGED BUSH			4068
4	1	SPLIT PIN		Φ3/8"X5"	4067
3	1	SHEAR PIN			4066
2	2	SPACER			4065
1	1	ADAPTOR BRACKET			4063/?

Design by	Drawn at	Copied	Checked	Standard	Affirmed	Scale	Replace	Replaced by
M.LEE						1 : 2.5		

DAWSON CONSTRUCTION PLANT LTD.

ADAPTOR BRACKET ATTACHMENT

File name	Date
	21-12-92

Drawing no. 4064

Rf.nr	Qnt.	Revision	Date	Intro.	Appr.by

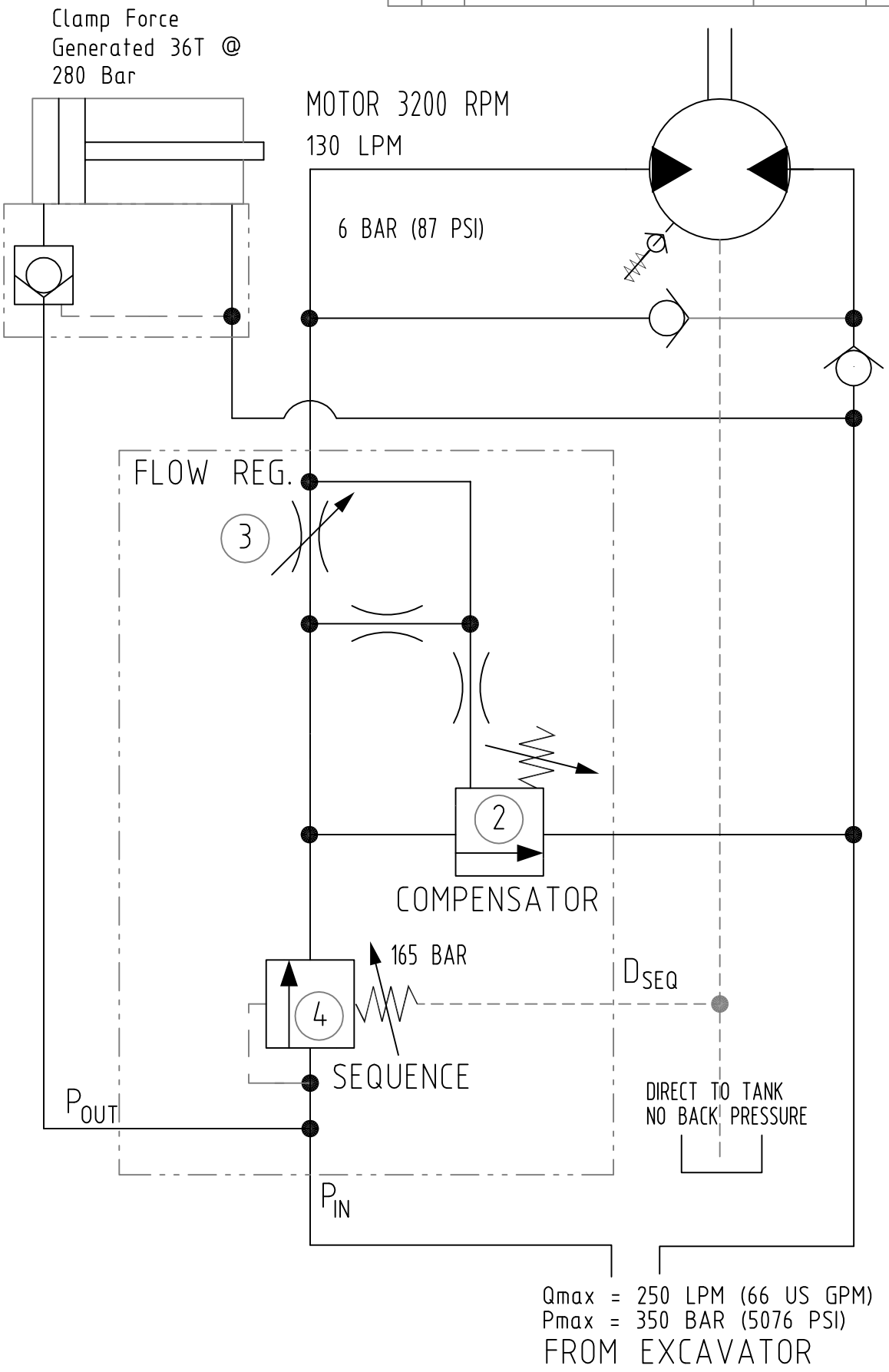

Ref.no.	Qnt.	Part name	Material	Dimension	Remark

Design by	Drawn at	Copied	Checked	Standard	Affirmed	Scale	Replace	Replaced by
M.LEE				A4				

DAWSON CONSTRUCTION PLANT LTD.

HYDRAULIC CIRCUIT SCHEMATIC - EMV 300

File name

Date 17/07/17

Drawing no. emv300hydcir

Bypass Compensator
8.5mm (default setting)

Flow Regulator
21mm (default setting)

Sequence valve
12mm (default setting)

appendix a- auxiliary equipment

EMV - AUXILLARY EQUIPMENT

ITEM	DESCRIPTION	ITEM No.	WEIGHTS
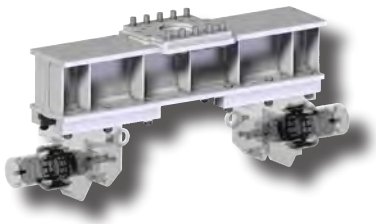	**CAISSON BEAM** Caisson beam jaw assemblies can be positioned to suit any tube size between Ø300 I.D & Ø1100 mm O.D.	4900	Weight EMV300 = 1500kg + (adaptor bracket) Weight EMV450 = 1700kg + (adaptor bracket) Weight EMV550 = 1800kg + (adaptor bracket)
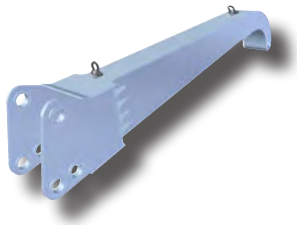	**SWAN NECK** For extended reach and greater pile clearance on your excavator arm, enabling longer piles to be driven.	4939 4932 4931	1.5m = 340kg 2m = 470kg 4m = 1100kg
	ADAPTOR BRACKETS A range of brackets to suit the EMV connection to various size excavators.	4063	50kg (see table on drawing 4063 summary table for all variables).
4589 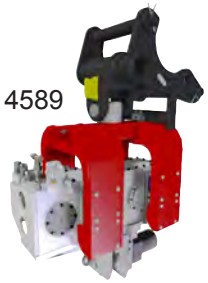 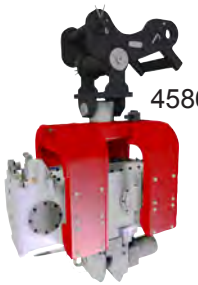 4586	**QUICK HITCH ADAPTOR** When an excavator has a guide hitch fitted and a double acting breaker to supply the EMV, the quick hitch adaptor bracket supplies fast, easy connection to the end equipment while maintaining the same degree of movement.	4586 4589 (with intergrated adaptor bracket)	112kg 200kg
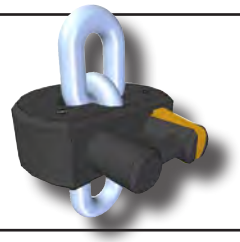	**CHAIN CLAMP** For all lifting applications. The unit indexes along the links of the chain and locks into place giving a quick and simple chain lock for lifting.	4130 TLR 360 4082	SWL / WEIGHT 2000kg / 1kg — 8 mm chain clamp 3200kg / 1.2kg — 10 mm chain clamp 8000kg / 3.7kg — 16 mm chain clamp

Rf.nr	Qnt.	Revision	Date	Intro.	Appr.by

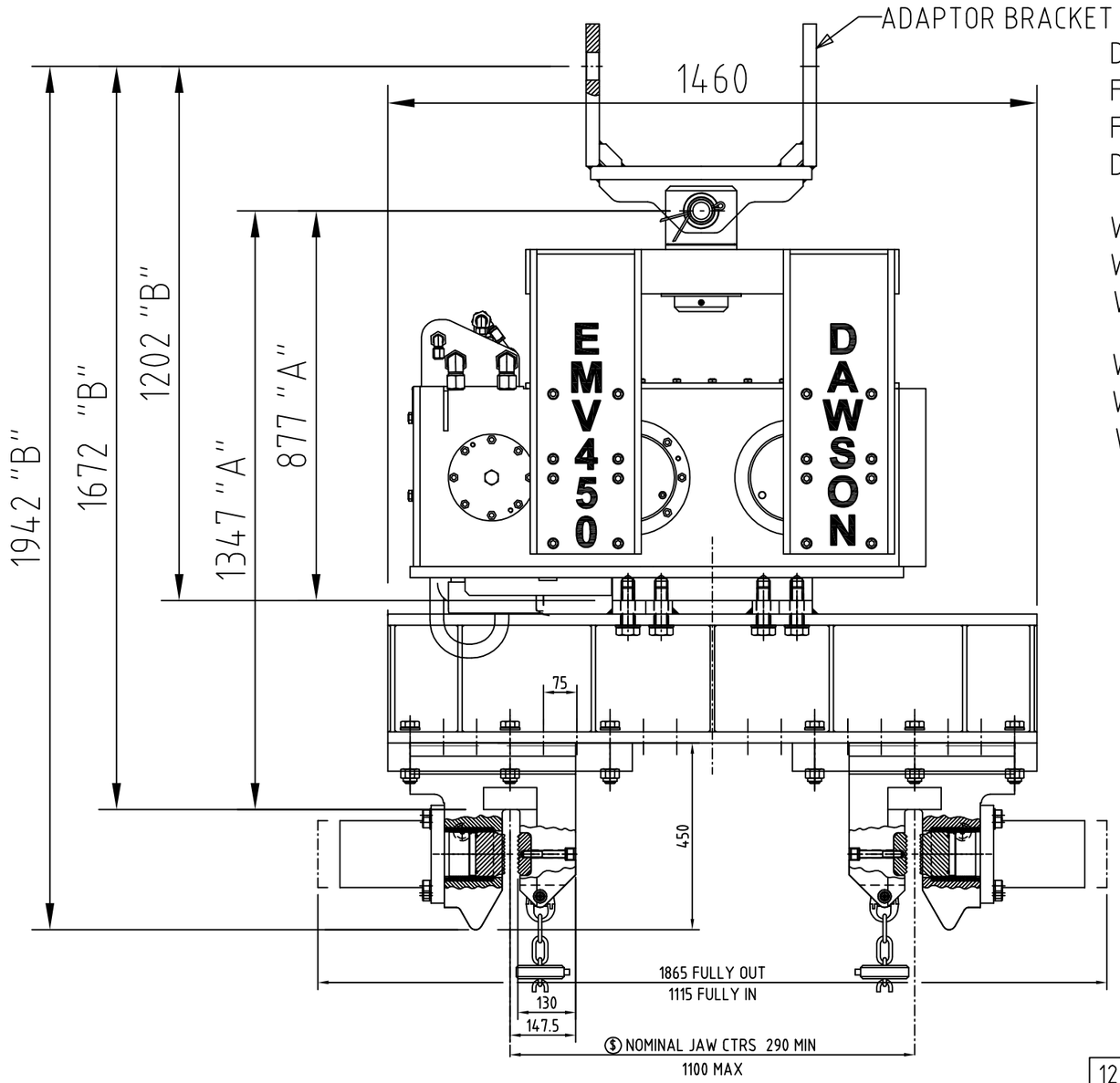

Dimensions shown are for an EMV450
For an EMV550 + 125MM DIM"A" AND +175mm DIM "B"
For an EMV300 - 52mm OR - 140mm DIM "A" AND "B"
Depending on SADDLE TYPE

WEIGHT EMV300 = 1500 Kg + ADAPTOR BRACKET
WEIGHT EMV450 = 1700 Kg+ ADAPTOR BRACKET
WEIGHT EMV550 = 1800 Kg+ ADAPTOR BRACKET

WEIGHT CSV300 = 2027 Kg + ADAPTOR BRACKET
WEIGHT CSV450 = 2247 Kg+ ADAPTOR BRACKET
WEIGHT CSV550 = 2634 Kg+ ADAPTOR BRACKET

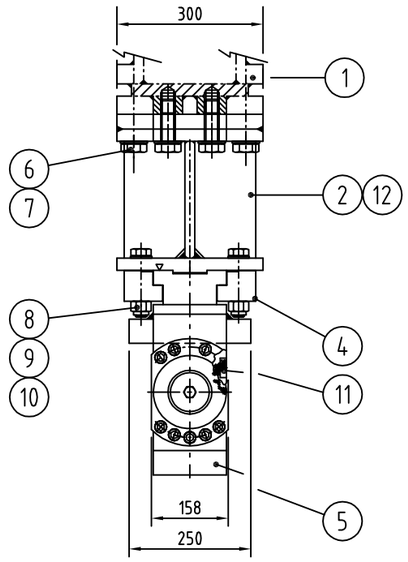

4940 CAISSON BEAM STAND WEIGHT 400Kg

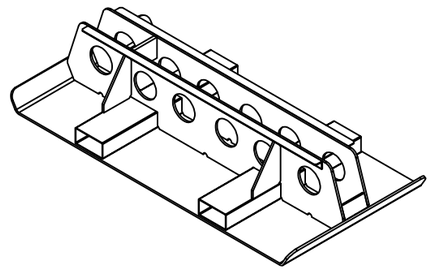

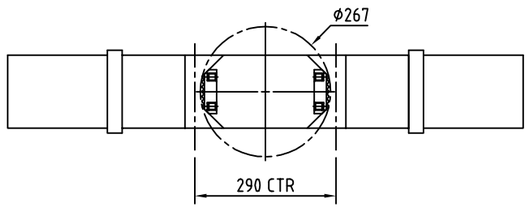

$ JAW ADJUSTMENT DETAILS:
EACH JAW ASSEMBLY MAY BE POSITIONED ALONG THE BEAM IN 75mm PITCHES.
EACH JAW CAN BE MOVED +/- 50mm FOR EACH CLAMPED POSITION TO ACHIEVE A FULL RANGE OF INFINITELY VARIABLE POSITIONS WITHIN THE LIMITS NOTED ABOVE.

Ref.no.	Qnt.	Part name	Material	Dimension	Part number
12	A/R	PAINT FINISH			TO CUSTOMERS ORDER
11	A/R	GREASE			
10	12	PLAIN WASHER		M24	2-087-00-01
9	12	NYLOC NUT		M24	0M24.000.11
8	12	HEX HD BOLT	8.8	M24 X 125	0M24.125.01
5	2	JAW ASSEMBLY			4018C
4	4	GIB STRIP			4912
2	1	BEAM WELD ASSEMBLY			4910
1	1	EMV 400 GEARBOX			

Design by	Drawn at	Copied	Checked	Standard	Affirmed	Scale	Replace	Replaced by
WJW				A3		1:8		

DAWSON CONSTRUCTION PLANT LTD.

EMV 300/450/550
TO CAISSON BEAM

File name 4900.DWG
Date 12-11-12
Drawing no. 4900 issue E

DAWSON
CONSTRUCTION PLANT LTD

CAISSON BEAM BOLT FIXING ARRANGEMENT

EMV300 CLAMP ARRANGEMENT

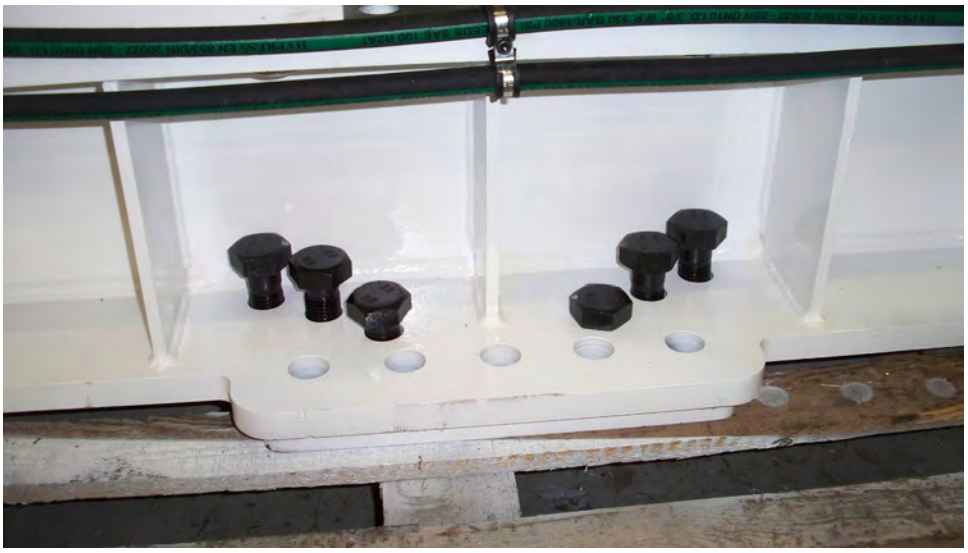

EMV450 CLAMP ARRANGEMENT

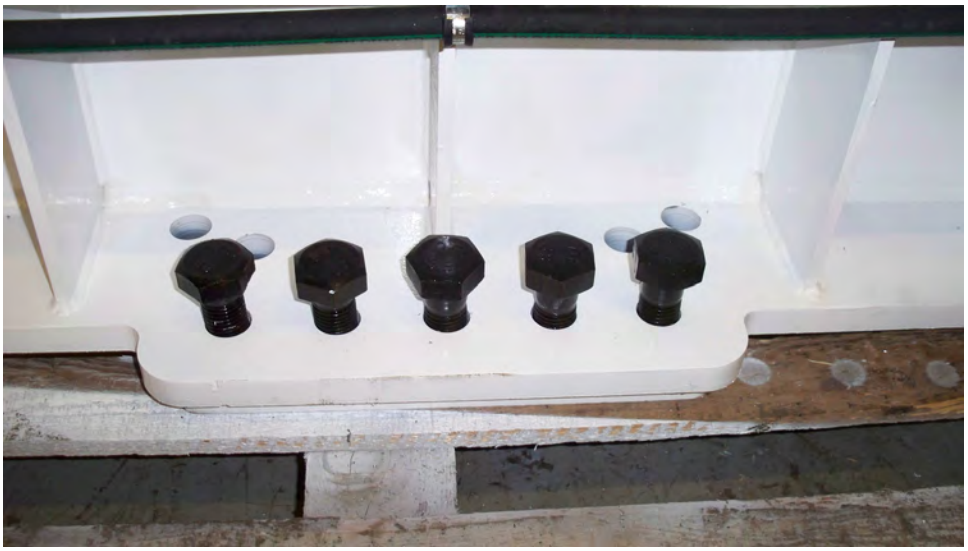

EMV550 CLAMP ARRANGEMENT

Rf.nr	Qnt.	Revision	Date	Intro.	Appr.by

3RD ANGLE

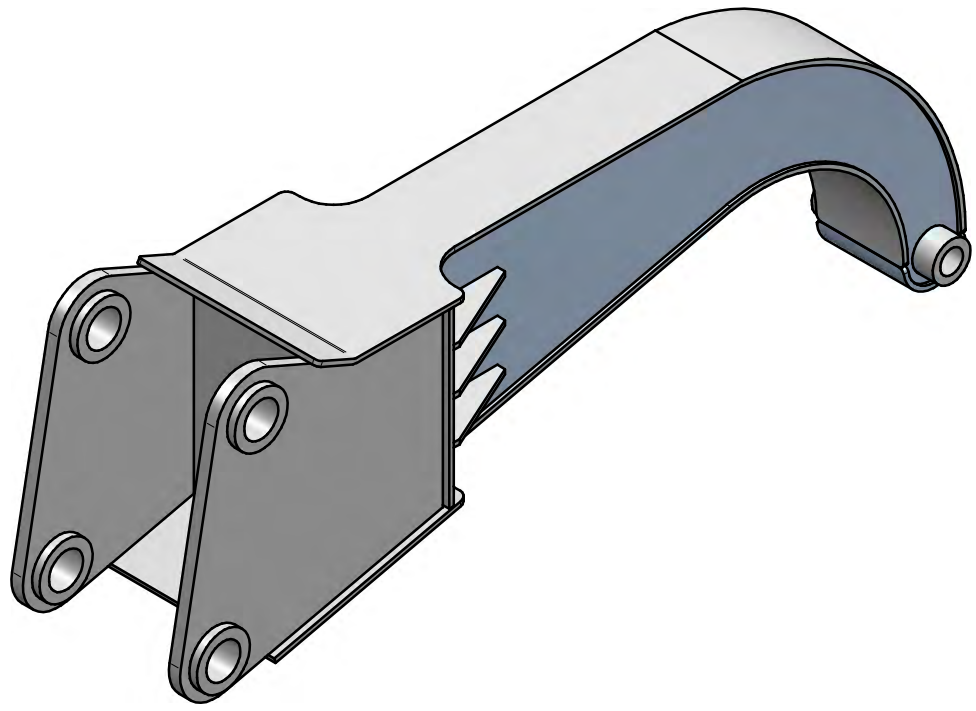

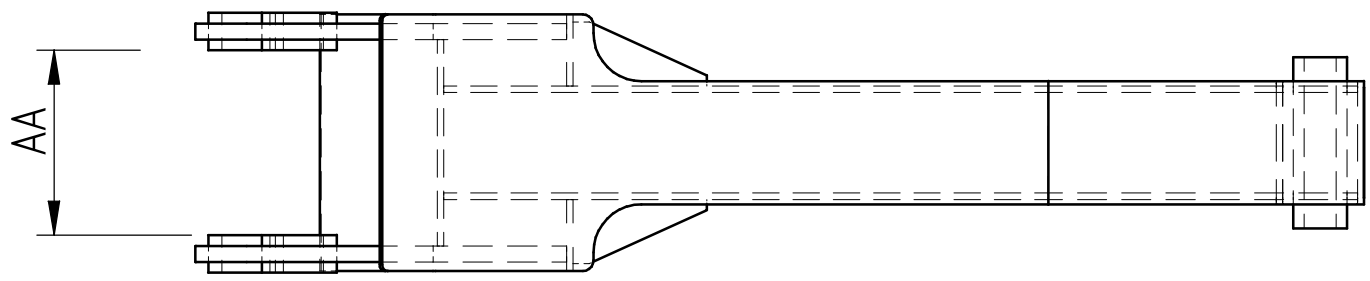

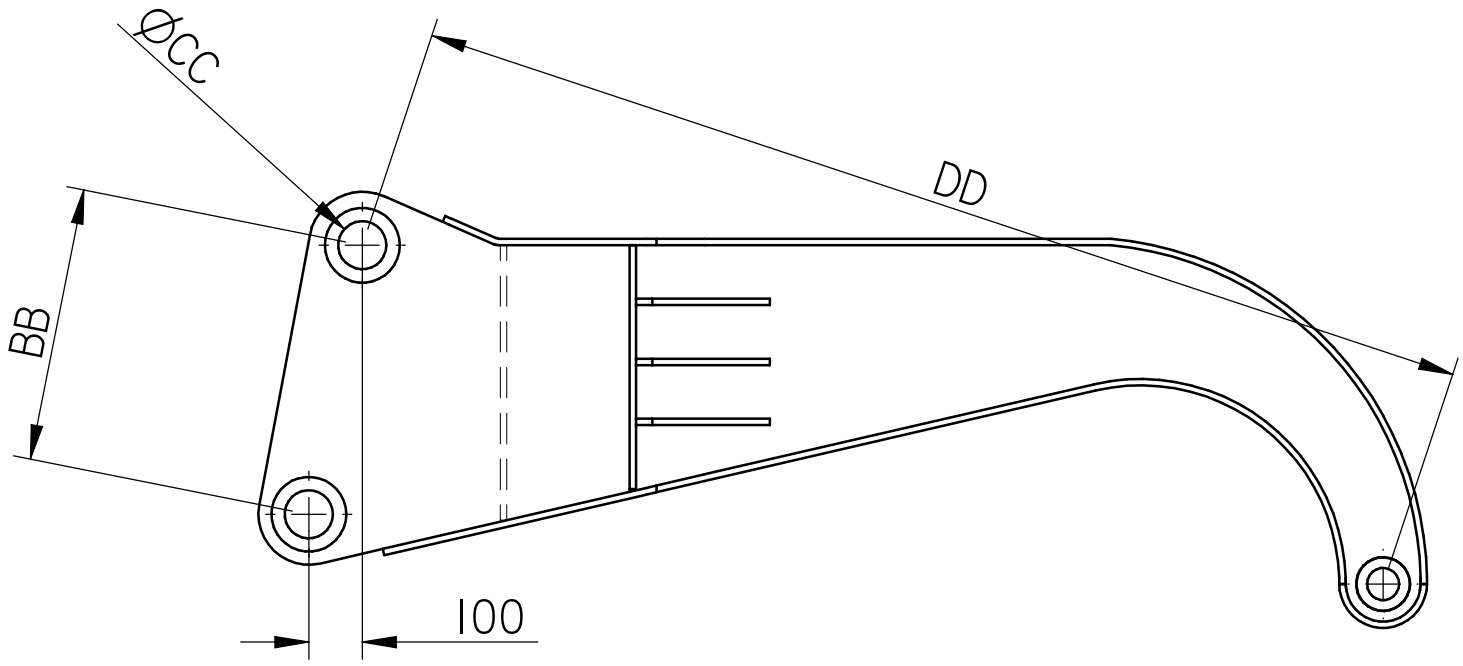

DIMENSIONS OF EXCAVATOR BUCKET CONNECTION		
	DIM MM	DIM MM
AA	346	
BB	513	
ØCC	90	
DD	2011	

Ref.no.	Qnt.	Part name	Material	Dimension	Remark

Design by	Drawn by	Copied	Checked	Standard	Affirmed	Scale	Replace	Replaced by
peter watt	peter watt	-	-	A4	-	-	-	-

DAWSON CONSTRUCTION PLANT LTD.

SWAN NECK DIMENSIONAL DATA

Sheet 1 of 1

Date 04/02/2011

Drawing no. SN01-000-01

Rf.nr	Qnt.	Revision	Date	Intro.	Appr.by

3RD ANGLE

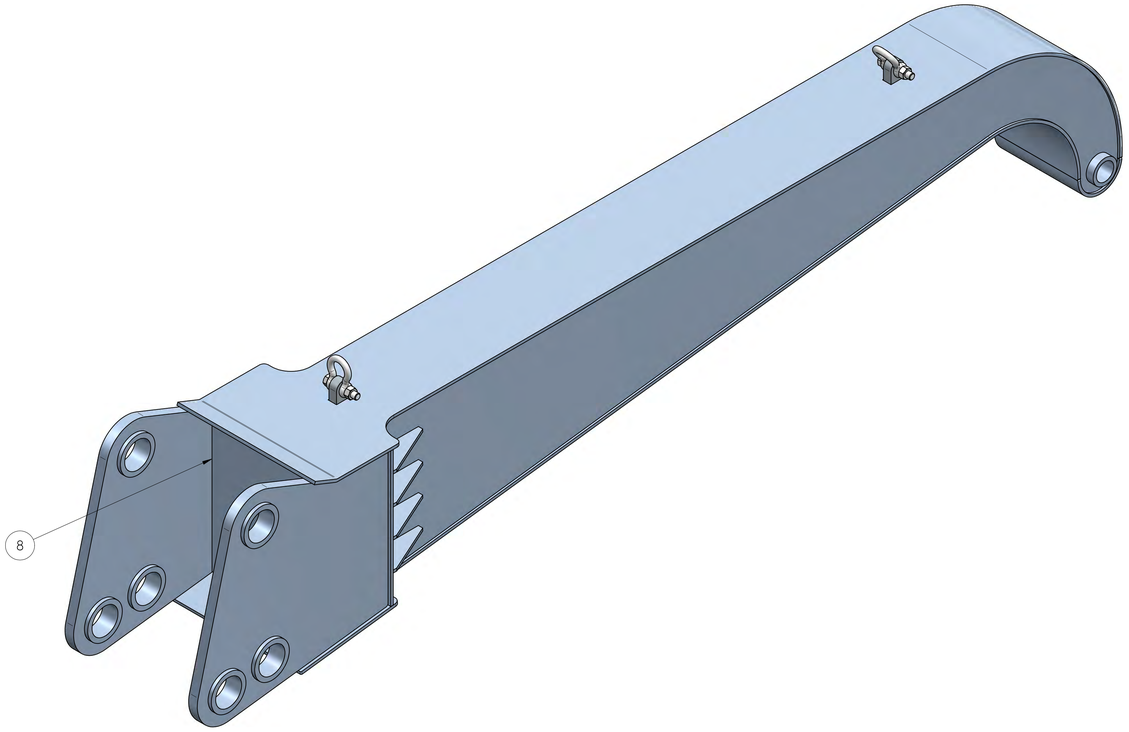

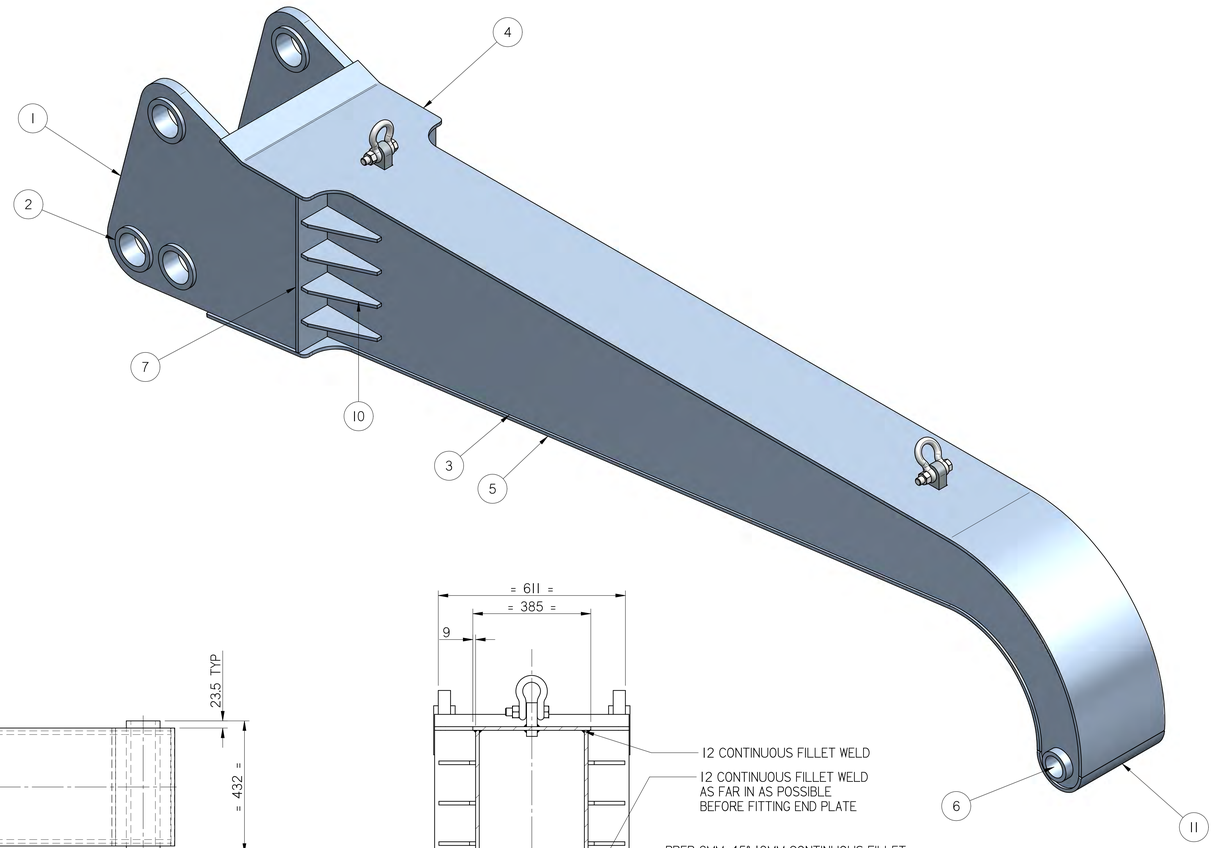

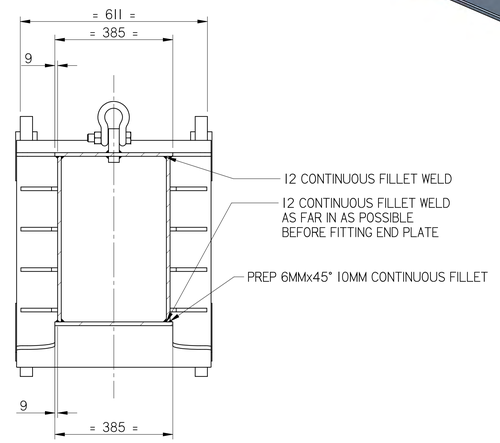

SECTION C-C

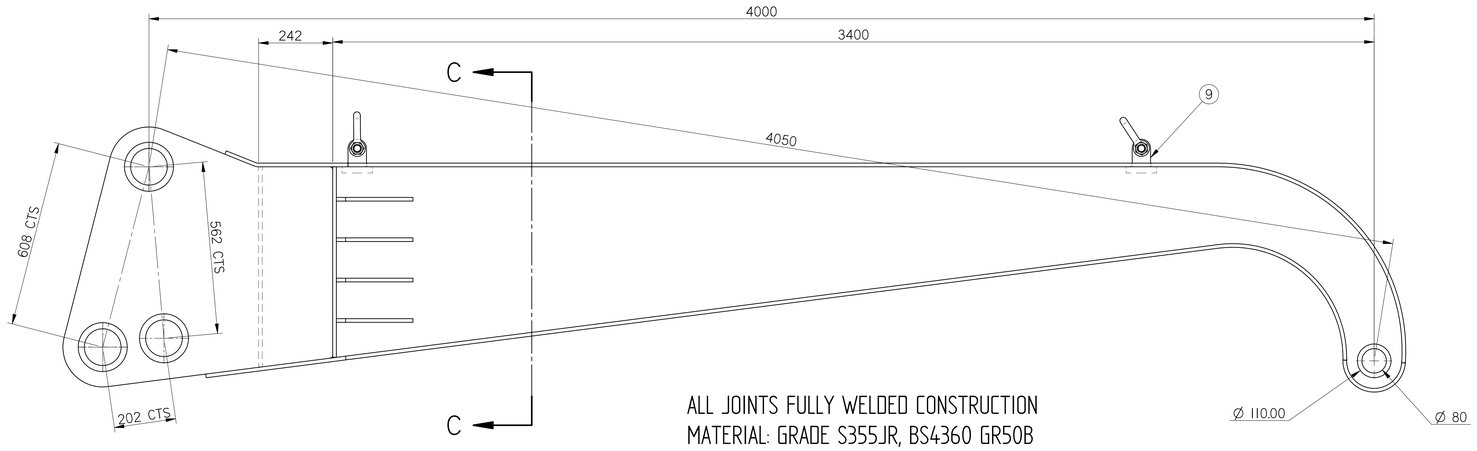

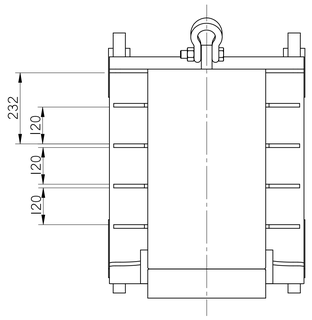

ALL JOINTS FULLY WELDED CONSTRUCTION
MATERIAL: GRADE S355JR, BS4360 GR50B
REMOVE ALL BURRS AND SHARP EDGES
WEIGHT 1100 KG

Ref.no.	Qnt.	Part name	Material	Dimension	Remark
11	1	PART 10			SN01-010-01
10	8	PART 9			SN01-009-01
9	2	LIFTING POINT			4931-012-01
8	1	PART 8 END PLATE			4931-008-01
7	2	PART 7			4931-007-01
6	1	PART 6			4931-006-01
5	1	PART 5			4931-005-01
4	1	PART 4			4931-004-01
3	2	PART 3			4931-003-01
2	6	PART 2			4931-002-01
1	2	PART 1			4931-001-01

Design by	Drawn by	Copied	Checked	Standard	Affirmed	Scale	Replace	Replaced by
PLW	MDB	–	–	A1	–	–	–	–

DAWSON CONSTRUCTION PLANT LTD.

SWAN NECK

Sheet 1 of 12 Date 16/03/2012

Drawing no. 4931-000-01

SURFACE FINISH	MACHINING TOLERANCES
UNLESS STATED OTHERWISE	UNLESS STATED OTHERWISE
▽ ROUGH MACHINE N9	X = +/- 0.5
▽▽ FINE MACHINE N8	X . X = +/- 0.25
▽▽▽ GRIND N6	X . XX = +/- 0.05
	ANGLES +/- 0.5°
	DIMENSIONS IN MILLIMETERS

3RD ANGLE

Rf.nr	Qnt.	Revision	Date	Intro.	Appr.by
A	Qnt.	PROFILE CHANGES	25-01-13	Intro.	PLW

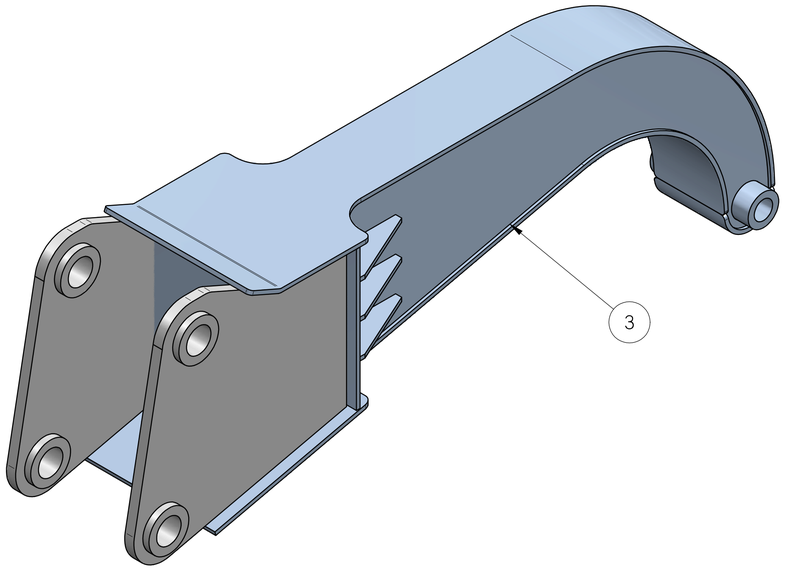

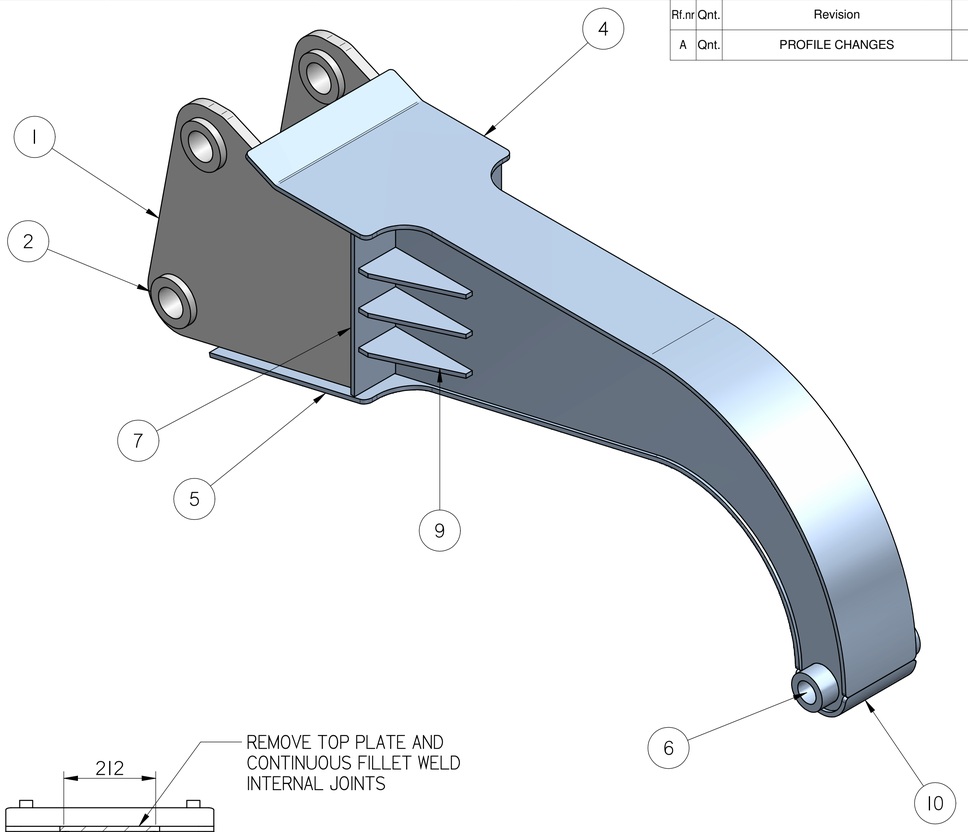

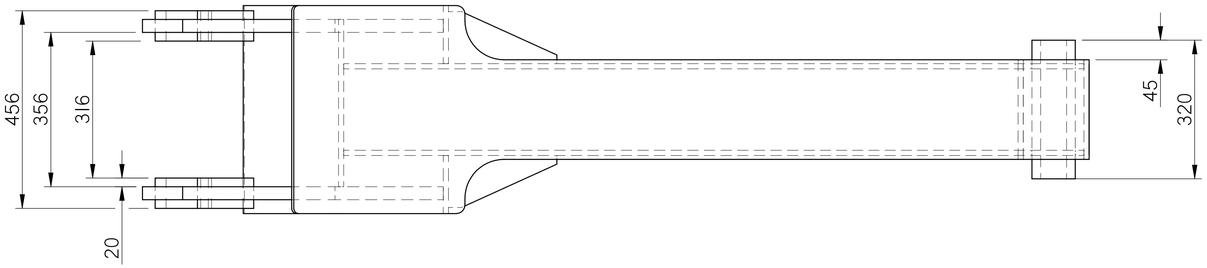

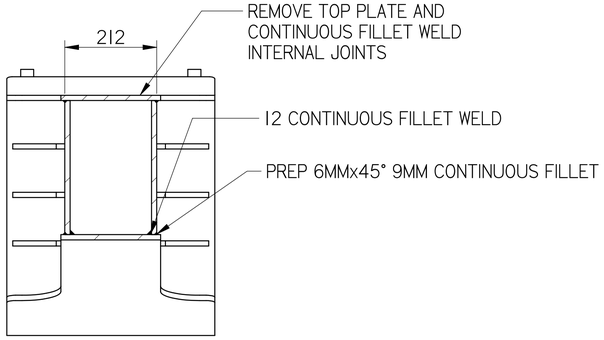

SECTION C-C

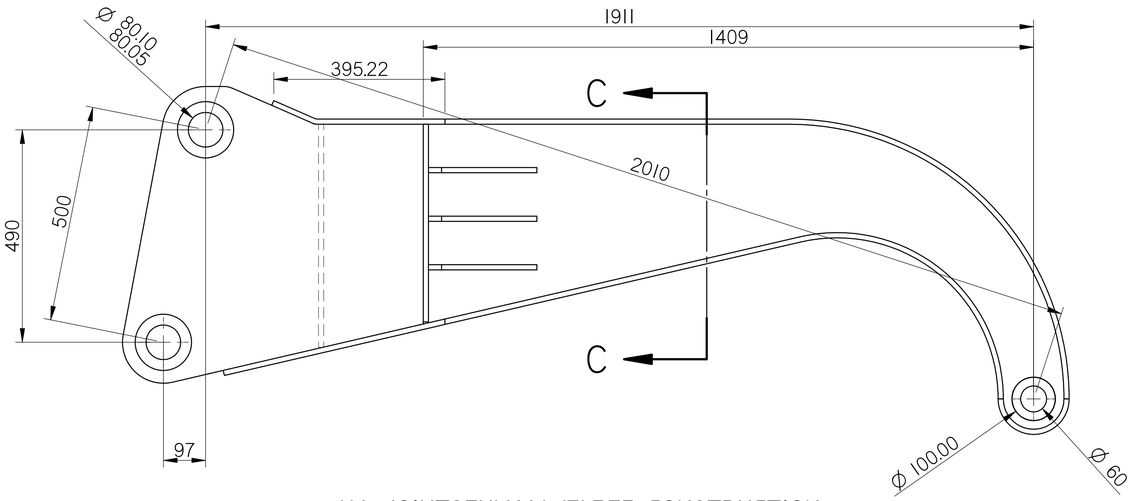

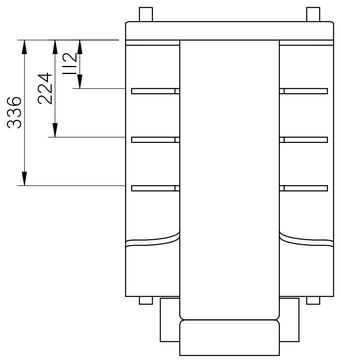

Ref.no.	Qnt.	Part name	Material	Dimension	Remark
10	1	PART 10			SN01-010-01
9	6	PART 9			SN01-009-01
8*	1	PART 8			SN01-008-01
7	2	PART 7			SN01-007-01
6	1	PART 6			SN01-006-01
5	1	PART 5			SN01-005-01
4	1	PART 4			SN01-004-01
3	2	PART 3			SN01-003-01
2	4	PART 2			4932-02
1	2	PART 1			4932-01

SURFACE FINISH UNLESS STATED OTHERWISE	MACHINING TOLERANCES UNLESS STATED OTHERWISE
▽ ROUGH MACHINE N9	X = +/- 0.5
▽▽ FINE MACHINE N8	X . X = +/- 0.25
▽▽▽ GRIND N6	X . XX = +/- 0.05
	ANGLES +/- 0.5°
	DIMENSIONS IN MILLIMETERS

ALL JOINTSFULLY WELDED CONSTRUCTION
MATERIAL: GRADE S355JR, BS4360 GR50B
REMOVE ALL BURRS AND SHARP EDGES
WEIGHT 470 KG

Design by	Drawn by	Copied	Checked	Standard	Affirmed	Scale	Replace	Replaced by
peter watt	peter watt	–	–	A2	–	–	–	–

DAWSON CONSTRUCTION PLANT LTD.

SWAN NECK

Sheet 1 of 11

Date 22/01/2013

Drawing no. 4932

Rf.nr	Qnt.	Revision	Date	Intro.	Appr.by

3RD ANGLE

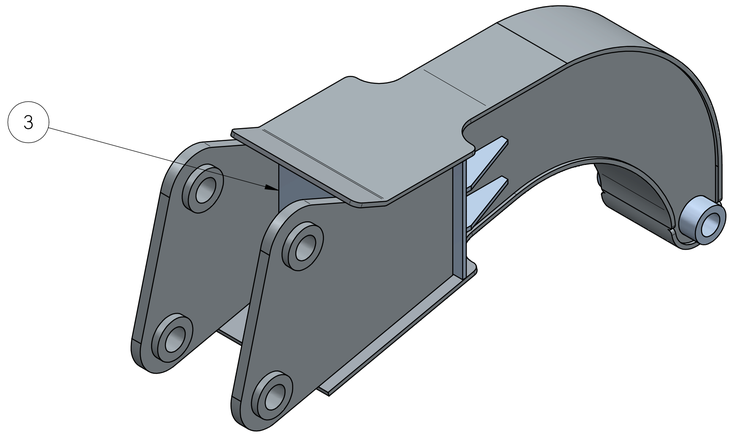

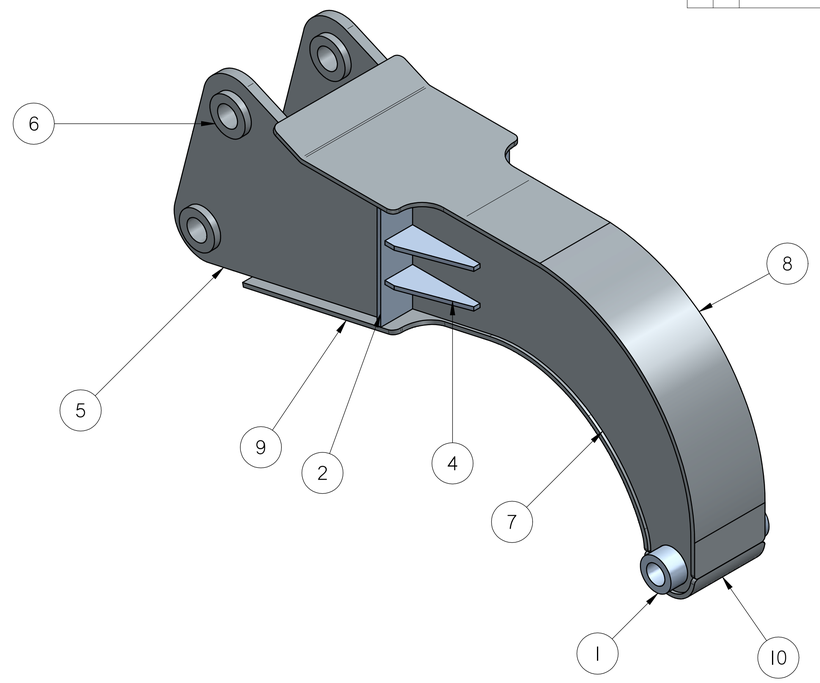

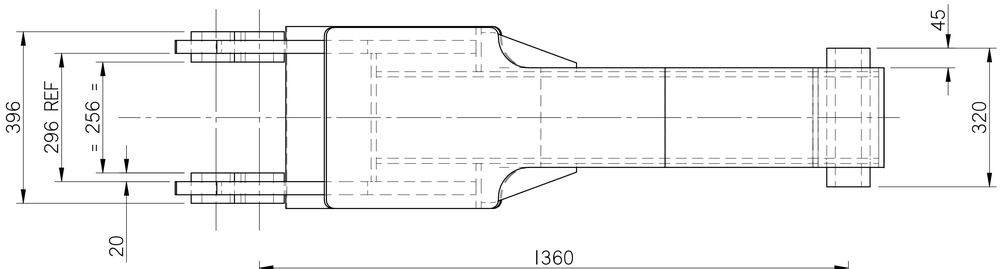

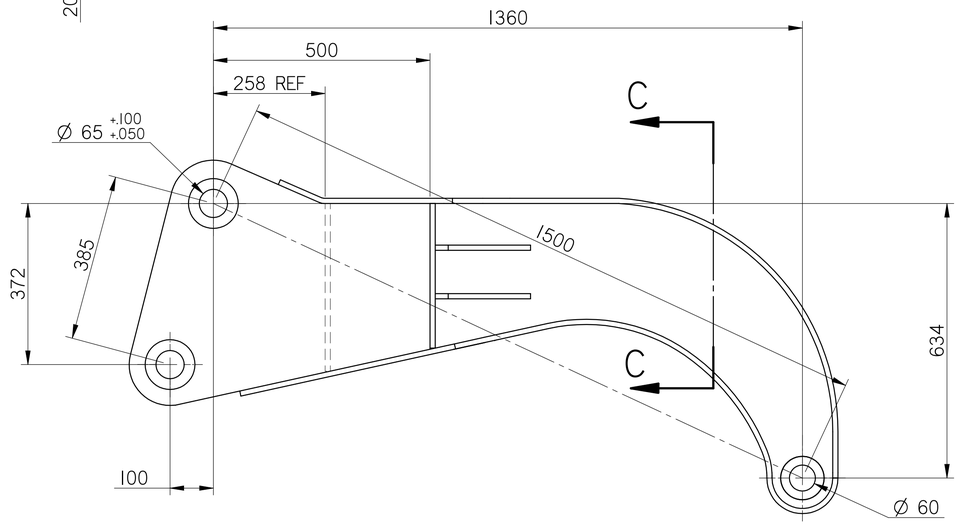

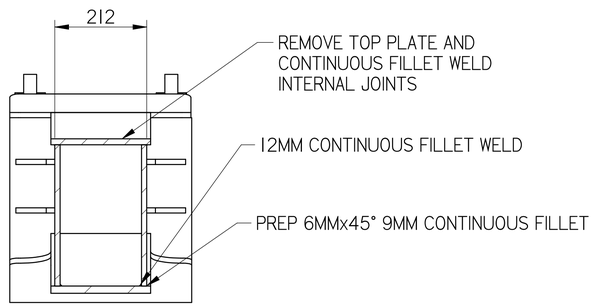

SECTION C-C

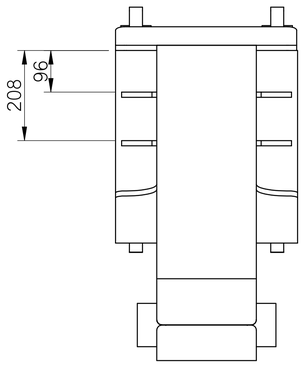

Ref.no.	Qnt.	Part name	Material	Dimension	Remark
10	1	TUBE PROFILE PLATE			4934-20
9	1	BOTTOM PLATE PROFILE			4934-15
8	1	TOP PLATE PROFILE			4934-14
7	2	SWAN NECK PROFILE			4934-13
6	4	BOSS			4934-12
5	2	CONNECTION PLATE			4934-11
4	4	SIDE RIB			4934-09
3	1	BACK SUPPORT PLATE			4934-08
2	2	MIDDLE SUPPORT PLATE			4934-07
1	1	TUBE			4934-06

SURFACE FINISH	MACHINING TOLERANCES
UNLESS STATED OTHERWISE	UNLESS STATED OTHERWISE
▽ ROUGH MACHINE N9	X = +/- 0.5
▽▽ FINE MACHINE N8	X . X = +/- 0.25
▽▽▽ GRIND N6	X . XX = +/- 0.05
	ANGLES +/- 0.5°
	DIMENSIONS IN MILLIMETERS

ALL JOINTSFULLY WELDED CONSTRUCTION
MATERIAL: GRADE S355JR, BS4360 GR50B
REMOVE ALL BURRS AND SHARP EDGES
WEIGHT 340 KG

Design by	Drawn by	Copied	Checked	Standard	Affirmed	Scale	Replace	Replaced by
MDB	MDB	–	–	A2	–	–	–	–

DAWSON CONSTRUCTION PLANT LTD.

SWAN NECK
1500MM

Sheet 1 of 4
Date 15/12/2015
Drawing no. 4934

Rf.no.	Qnt.	Revision	Date	Intro.	Appr.by

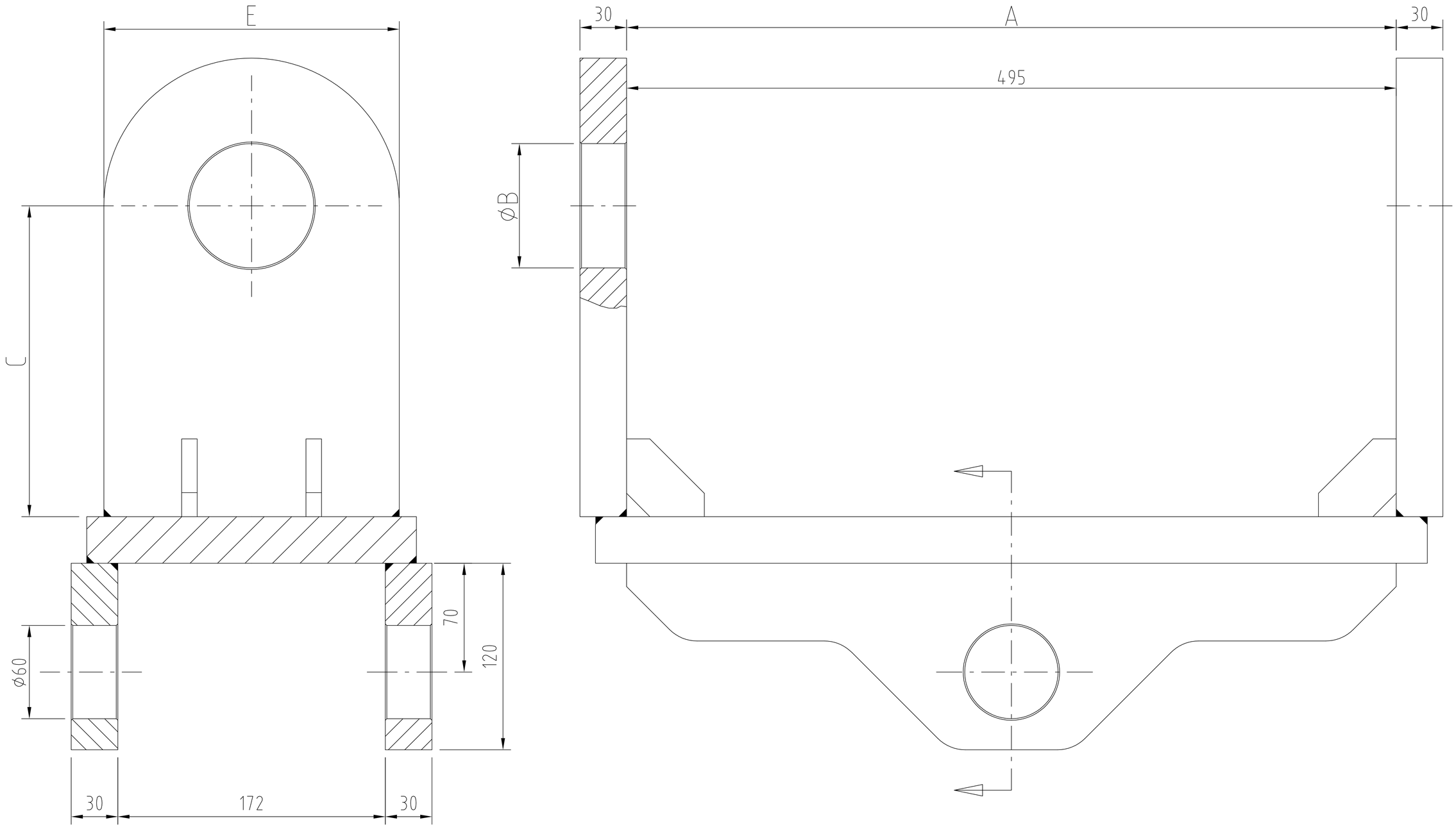

Part Number	Dimensions - mm				Dipper Pin
	A	ØB	C	E	Part Number
4063	340	60.00	175	140	4089
4063A	495	80.00	200	190	4089A
4063C	458	89.50	225	190	4089C
4063D	410	60.00	200	190	4089D
4063E	458	60.00	225	190	4089E
4063F	495	63.75	200	190	4089F
4063M	458	63.75	225	190	4089M
4063R	495	69.85	225	190	4089R

Ref.no.	Qnt.	Part name	Material	Dimension	Remark
Design by M.LEE	Drawn at	Copied	Checked	Standard A3	Affirmed
Scale 1 : 2.5	Replace	Replaced by			
DAWSON CONSTRUCTION PLANT LTD.	EMV ADAPTOR BRACKETS	File name	Date 03-05-06		
Drawing no. 4063SummaryTable					

3RD ANGLE

Rf.nr	Qnt.	Revision	Date	Intro.	Appr.by
A	Qnt.	NOW Ø80MM SLEEVES WAS 70MM 20MM WASHERS WERE 10MM	010812	Intro.	PLW
B	Qnt.	LIFTING LUG ADDED, WEIGHT WAS 105KG PULL TEST AND CE MARK ADDED	110313	Intro.	PLW
C	Qnt.	GREASE NIPPLES ADDED TO DIPPER PINS WERE 4089 NOW 4089G	180313	Intro.	PLW
D	Qnt.	PROOF TEST WAS 12T NOW 9.5T AND PROOF 16T ADDED AS MAX PULL LOAD WHEN CONNECTED TO EMV VIA ADAPTOR BRACKET	030413	Intro.	PLW
E	Qnt.	SLEEVES REMOVED FROM DRAWING, NOTE ADDED ABOUT SLEEVES AND 2 off 4324 WERE 4090	150913	Intro.	PLW

(E) A SET OF SLEEVES ARE INCLUDED WITH QUICK HITCH DIAMETER TO BE ADVISED WHEN PLACING ORDER

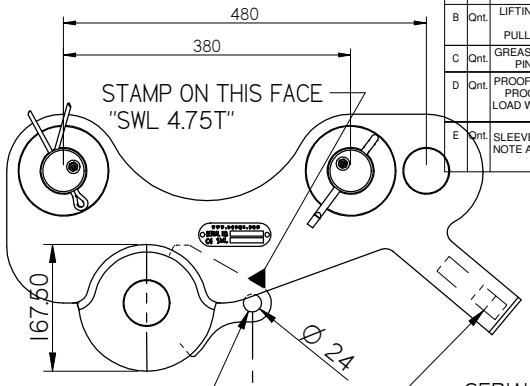

LIFTING LUG THAT SUITS 4.75 SAFETY BOW SHACKLE

SERIAL NUMBER STAMPED HERE QH000, QH001, QH002 etc.

4.75T MAX

PROOF TEST 9.5 TONNE

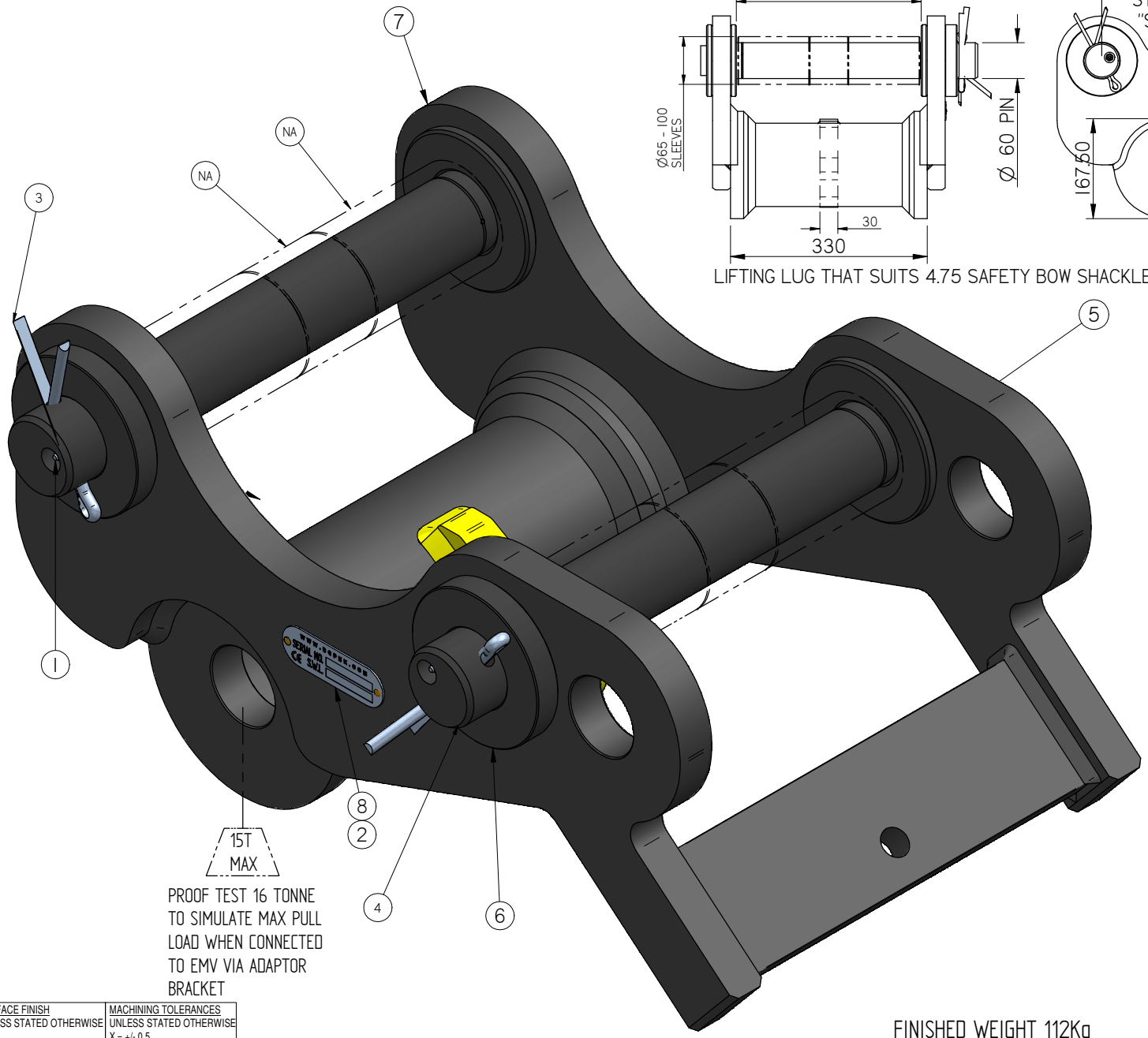

15T MAX

PROOF TEST 16 TONNE TO SIMULATE MAX PULL LOAD WHEN CONNECTED TO EMV VIA ADAPTOR BRACKET

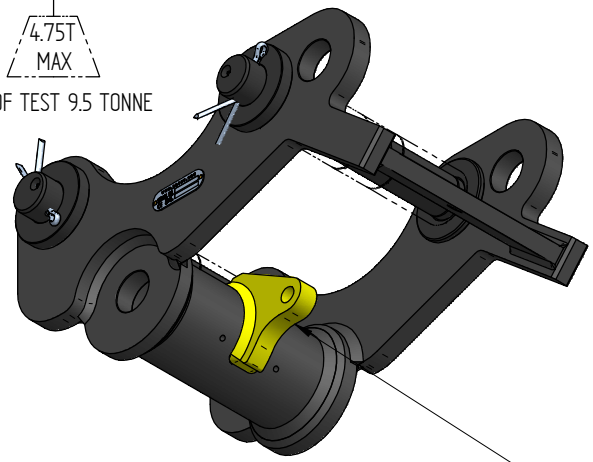

PAINT LIFTING LUG YELLOW

FOR TESTING FIT A 4.75T SAFETY BOW SHACKLE THROUGH THE LIFTING LUG AND APPLY A LOAD OF 9.5 Tonne REACTING AGAINST THE TWO DIPPER PINS, TEST TO BE REPEATED WITH THE DIPPER PIN IN BOTH LOCATIONS.

Ref.no.	Qnt.	Part name	Material	Dimension	Remark
8	1	SHACKLE ID PLATE	ALUMINIUM		5938
7	1	Quick Hitch Fab	BE4360 En50B		4586 FAB
6	2	INSTALLATION BUSH	Φ120 X 20		4324
5	4	DIPPER PIN WASHER			4090
4	2	DIPPER PIN			4089G
3	2	SPLIT PIN			4067
2	2	No6 x 1/2" Rivet			1-204-000-01
1	4	GREASE NIPPLE		1/8" BSP	1-057-00-01

FINISHED WEIGHT 112Kg

SURFACE FINISH UNLESS STATED OTHERWISE	MACHINING TOLERANCES UNLESS STATED OTHERWISE
▽ ROUGH MACHINE N9	X = +/- 0.5
▽▽ FINE MACHINE N8	X . X = +/- 0.25
▽▽▽ GRIND N6	X . XX = +/- 0.05
	ANGLES +/- 0.5°
	DIMENSIONS IN MILLIMETERS

Design by	Drawn by	Copied	Checked	Standard	Affirmed	Scale	Replace	Replaced by
peter watt	peter watt	–	–	A2	–	–	–	–

DAWSON CONSTRUCTION PLANT LTD.

Quick Hitch Assy

Sheet 1 of 1

Date 06/03/2012

Drawing no. 4586

Rf.nr	Qnt.	Revision	Date	Intro.	Appr.by
A	Qnt.	SLEEVES REMOVED FROM BOM 4324 WAS 4090	25-09-13	Intro.	PLW

3RD ANGLE

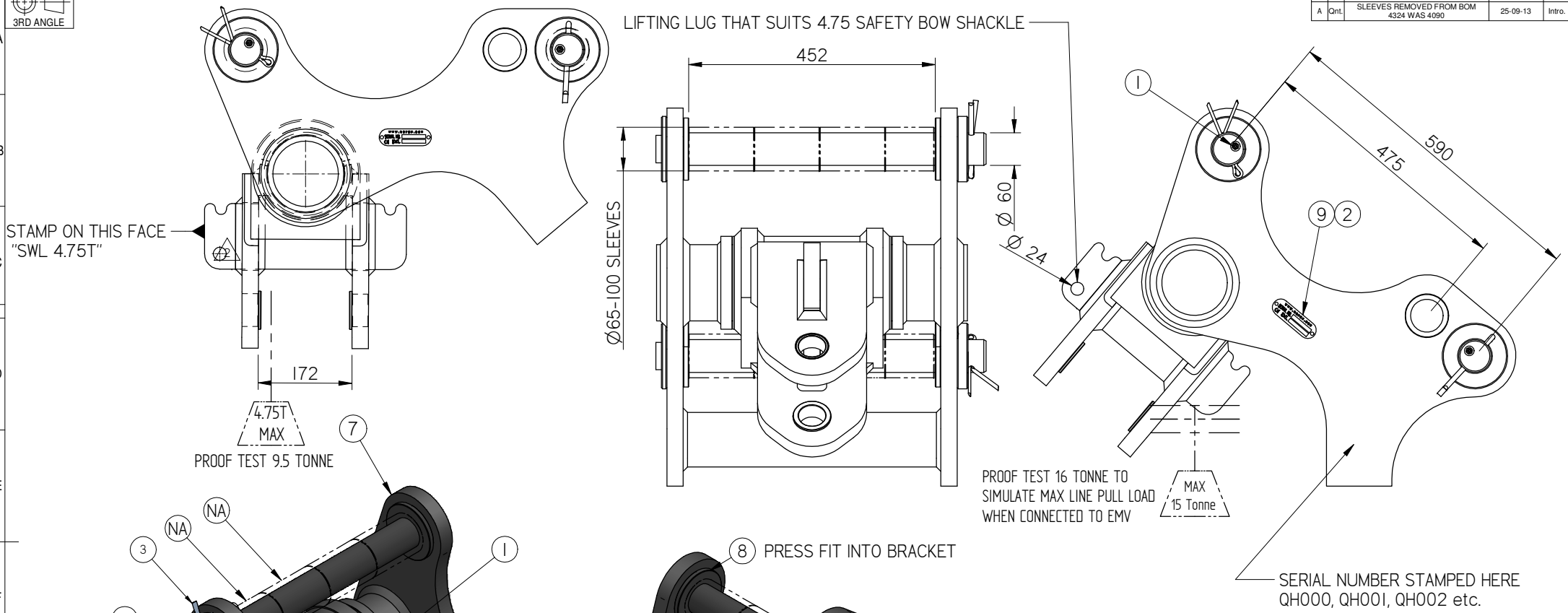

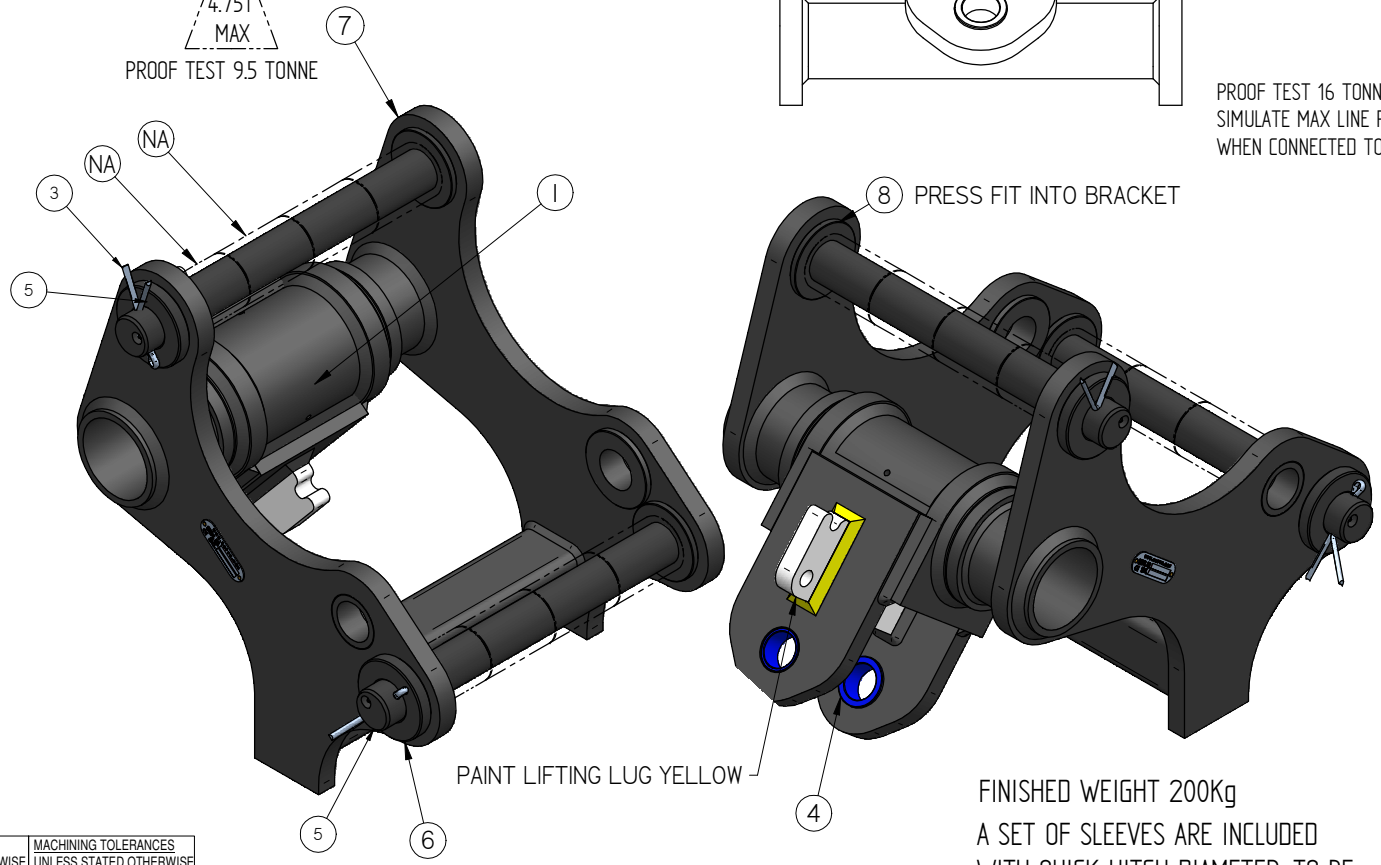

FOR TESTING FIT A 4.75T SAFETY BOW SHACKLE THROUGH THE LIFTING LUG AND APPLY A LOAD OF 9.5 Tonne REACTING AGAINST THE TWO DIPPER PINS, TEST TO BE REPEATED WITH THE DIPPER PIN IN BOTH LOCATIONS.

FINISHED WEIGHT 200Kg

A SET OF SLEEVES ARE INCLUDED WITH QUICK HITCH DIAMETER, TO BE ADVISED WHEN PLACING ORDER

Ref.no.	Qnt.	Part name	Material	Dimension	Remark
9	1	SHACKLE ID PLATE	ALUMINIUM		5938
8	6	STEPPED PRESS FIT BUSH			4589-010
7	1	Quick Hitch Fab	BE4360 En50B		4589 FAB
6	2	Installation washer		20mm thick	4324
5	2	DIPPER PIN Φ60 X 585MM			4089-005
4	2	FLANGED BUSH			4068
3	2	SPLIT PIN			4067
2	2	No6 x 1/2" Rivet			1-204-000-01
1	6	GREASE NIPPLE		1/8" BSP	1-057-00-01

Design by	Drawn by	Copied	Checked	Standard	Affirmed	Scale	Replace	Replaced by
peter watt	peter watt	-	-	A2	-	-	-	-

DAWSON CONSTRUCTION PLANT LTD.

Quick Hitch Assy
With integrated adaptor bracket

Sheet 1 of 1 | Date 01/03/2013 | Drawing no. 4589

SURFACE FINISH UNLESS STATED OTHERWISE	MACHINING TOLERANCES UNLESS STATED OTHERWISE
▽ ROUGH MACHINE N9	X = +/- 0.5
▽▽ FINE MACHINE N8	X . X = +/- 0.25
▽▽▽ GRIND N6	X . XX = +/- 0.05
	ANGLES +/- 0.5°
	DIMENSIONS IN MILLIMETERS

TIGHTENING TORQUES FOR SCREWS WITH STANDARD METRIC THREAD

Screw size	Preload values F_M based on Grades in N			Tightening torques M_A based on Grades in Nm			Wrench size for			
							Hex head screw		Socket head screw	
	8.8	10.9	12.9	8.8	10.9	12.9	mm	Inch	mm	Inch
M4 x 0.7	3,900	5,700	6,700	3.1	4.5	5.3	7	9/32	3	-
M5 x 0.8	6,400	9,300	10,900	6.1	8.9	10.4	8	-	4	5/32
M6 x 1	9,000	13,200	15,400	10.4	15.5	18.0	10	-	5	-
M7 x 1	13,100	19,300	22,600	17.0	25.0	30.0	11	-	-	-
M8 x 1.25	16,500	24,200	28,500	25	37	43	13	1/2	6	-
M10 x 1.5	26,000	38,500	45,000	51	75	87	17	11/16	8	-
M12 x 1.75	38,500	56,000	66,000	87	130	150	19	3/4	10	-
M14 x 2	53,000	77,000	90,000	140	205	240	22	7/8	12	-
M16 x 2	72,000	106,000	124,000	215	310	370	24	61/64	14	9/16
M18 x 2.5	91,000	129,000	151,000	300	430	510	27	1-1/16	14	9/16
M20 x 2.5	117,000	166,000	194,000	430	620	720	30	1-3/16	17	43/64
M22 x 2.5	146,000	208,000	243,000	580	970	830	32	1-9/92	17	43/64
M24 x 3	168,000	239,000	280,000	740	1,060	1,240	36	1-7/16	19	3/4
M27 x 3	221,000	315,000	370,000	1,100	1,550	1,850	41	1-5/8	19	3/4
M30 x 3.5	270,000	385,000	450,000	1,500	2,100	2,500	46	1-13/16	22	7/8
M33 x 3.5	335,000	480,000	560,000	2,000	2,800	3,400	50	2	24	61/64
M36 x 4	395,000	560,000	660,000	2,600	3,700	4,300	55	2-3/16	27	1-1/16
M39 x 4	475,000	670,000	790,000	3,400	4,800	5,600	60	2-3/8	27	1-1/16

NOTE!
Preload forces and tightening torques are based on lightly lubricated screws and nuts (corresponds to medium friction $\mu G = 0.14$). Nm = x 0.7375 = ft. lbs.

DAWSON CONSTRUCTION PLANT LTD

PRE-DELIVERY INSPECTION SHEET

EMV'S, VPC'S AND EMD'S

MACHINE TYPE								
EMV550	EMV450	EMV400	EMV300	EMV70	VPC	EMD140	EMD70	✓

Serial No:	
Photo taken before dispatch:	

ADAPTOR BRACKET / QUICK HITCH ASSEMBLY		
Adaptor Pin	Diameter	Length
Bushes List		
Additional Spares Supplied		

SADDLE ASSEMBLY

Sandwich Mount Condition		✓
Buffer Stop Condition		
Top Swivel Condition Max gap 1mm (ideally no play)		
Greased		✗

Maximum gap allowed due to wear.(see photo)
Check using a crowbar to force apart assembly, then insert a feeler gauge at least 20mm into gap, if more than 1mm change lifting bolt and nut immediately and check other components replacing as required.

Remarks:

HOSES

Hoses Condition		✓
Spring Guard Condition		
Running Leaks		
Fittings		✗
Additional Spares Supplied		

Remarks:

GEARBOX ASSEMBLY

Oil Level		✓
Leaks *(Visual)*		
Case Breather Valve		
Motor Blow off Valve		✗
General Condition		

Remarks:

CLAMP ASSEMBLY

Serial No.		
Static Jaw Condition		✓
Moving Jaw Condition		
Greased		✗
Chain Clamp (Serial No.)		
Lifting Chain (Serial No.)		
Coupler (Serial No.)		

Remarks:

Stand:	✓ ✗
Remarks:	

VIBRO RUNNING CHECKS

Cycle Clamp x5 to Check Function			✓
Close Clamp Stop Vibro & Leave for 5 mins (CLAMP MUST STAY CLOSED)			
Run Vibro and Check for External Leaks	Hoses		
	Fittings		
	Motor Blow Off Valve		✗
	QRC		

Inspection Time / Date:	Inspector Name:

D.C.P. RESERVES THE RIGHT TO DISCONTINUE EQUIPMENT AT ANY TIME, OR CHANGE SPECIFICATIONS OR DESIGNS WITHOUT NOTICE OR INCURRING OBLIGATIONS

INNOVATIVE PILING EQUIPMENT

HYDRAULIC PILING HAMMERS

EXCAVATOR MOUNTED VIBRATORS

EXCAVATOR MOUNTED DRILLS

QUIET, VIBRATIONLESS PUSH-PULL PILING

PILE EXTRACTION

SHEET PILE GUIDE FRAMES

SHEET PILE CAPPING SYSTEMS

CFA CLEANERS

PILE POINTS & SPLICERS

SAFETY HANDLING / LIFTING EQUIPMENT

SHEET PILE THREADERS

excavator mounted vibrator

emv300

DAWSON CONSTRUCTION PLANT LTD.
CHESNEY WOLD,
BLEAK HALL
MILTON KEYNES
MK6 1NE, ENGLAND
TEL: +44 (0) 1908 240300
FAX: +44 (0) 1908 240222
EMAIL: JON@DCPUK.COM

DAWSON CONSTRUCTION PLANT LTD

www.dcpuk.com